PD6730X Field-Mount Modbus® Scanners

Instruction Manual

- NEMA 4X, IP66 Field-Mount Modbus Scanners
- Modbus Master, Slave, or Snooper Mode
- 0.4" (10.2 mm) 7 Alphanumeric Characters Lower Display for Process Variables, Custom Units, and Tags
- 5-Digit Decimal Display or Feet & Inches Display
- Display Mountable at 0°, 90°, 180°, & 270°
- SafeTouch Through-Window Button Programming
- Scan up to 16 Modbus Process Variables
- Independent Scaling, Tag, and Unit for Each PV
- Backlight Standard on All Models
- Isolated 4-20 mA Output Option
- Two Isolated Pulse Outputs Standard, up to 5 kHz
- Operating Temperature Range: -40 to 75°C (-40 to 167°F)
- Conformal Coated PCBs for Dust and Humidity Protection
- Password Protection
- Data Logging Functions and Modbus Accessible Data
- Free ScanView EX Programming Software
- On-Board Three-Wire Isolated RS-485 with Modbus RTU
- Wide Viewing Angle
- Flanges for Wall or Pipe Mounting
- Three 3/4" NPT Threaded Conduit Openings (Two Plugs Provided)
- 2" U-Bolt Kits Available
- Stainless Steel Tag Available
- 3-Year Warranty

PRECISION DIGITAL CORPORATION
233 South Street • Hopkinton MA 01748 USA
Tel (800) 343-1001 • Fax (508) 655-8990
www.predig.com

Disclaimer

The information contained in this document is subject to change without notice. Precision Digital Corporation makes no representations or warranties with respect to the contents hereof; and specifically disclaims any implied warranties of merchantability or fitness for a particular purpose.

CAUTION

- Read complete instructions prior to installation and operation of the scanner.

WARNINGS

- Risk of electric shock or personal injury.
- This product is not recommended for life support applications or applications where malfunctioning could result in personal injury or property loss. Anyone using this product for such applications does so at his/her own risk. Precision Digital Corporation shall not be held liable for damages resulting from such improper use.
- Failure to follow installation guidelines could result in death or serious injury. Make sure only qualified personnel perform the installation.

WARNING
Cancer and Reproductive Harm - www.P65Warnings.ca.gov

Limited Warranty

Precision Digital Corporation warrants this product against defects in material or workmanship for the specified period under "Specifications" from the date of shipment from the factory. Precision Digital's liability under this limited warranty shall not exceed the purchase value, repair, or replacement of the defective unit. See Warranty Information and Terms & Conditions on www.predig.com for complete details.

Introduction

The field-mount Vantageview Super Snoopers are serial input RS-485 Modbus® RTU scanners. These Modbus devices are ideal for applications in need of a rugged solution. The Vantageview decimal version has a two-line decimal display. The Vantageview feet & inches version's top line displays level in feet and inches up to 399 ft, 11 and 15/16 inches. It includes a 20-segment tank level indicator.

Each can accept up to 16 Modbus process variables (PVs), from up to 16 devices. The scanners automatically cycle through the PVs, with the ability to manually cycle PVs or pause scanning.

Up to four math channels (CV1-CV4) may be used to perform math functions on any of the input variables. Math functions include sum, difference, weighted average, ratio and more. Nested math functions may be used in these math equations, allowing for complex math functions.

The display is programmable to show any input, math channel, units, or tags, on a variety of display combinations between the top and bottom displays.

Standard features include SafeTouch through-window buttons for operating the scanner without removing the cover, a backlight that makes the display mode visible in any lighting condition, 511 points of input data logging, and two open collector pulse or alarm outputs. A 4-20 mA output is available as an option.

The enclosure has three threaded conduit holes, integrated pipe or wall mounting flanges, and allows for easy installation of tamper seals. Two conduit plugs are installed; additional plugs are available (part number PDAPLUG75P).

Free, PC-based, ScanView EX software that connects to the scanner via the PDA8068, PDA7485-I, or the PDA8485-I is available for programming and setup of the instrument.

The instrument can also be programmed using the four SafeTouch through-window buttons, without removing the cover, or with four internal push-buttons.

The PD6730X includes on-board data logging of up to 511 points.

Ordering Information

Model	Description
PD6730-AX0-I-2	Modbus RS-485 RTU scanner, 9-30 VDC power.
PD6730-AXA-I-2	Modbus RS-485 RTU scanner, isolated 4-20 mA output, 9-30 VDC power.
PD6730-AX0-I-L	Modbus RS-485 RTU scanner, feet & inches display, 9-30 VDC power.
PD6730-AXA-I-L	Modbus RS-485 RTU scanner, feet & inches display, isolated 4-20 mA output, 9-30 VDC power.

Accessories

Model	Description
PDAPLUG75P	3/4" Plastic Conduit/Stopping Plug
PDA0001	3/4" M-NPT to F-M20 Reducer
PDA0002	3/4" M-NPT to 1/2" F-NPT Reducer
PDA1024-01	24 VDC Power Supply for DIN Rail
PDA8068	USB Serial Adapter for Programming
PDA7485-I	PDA7485 RS-232 to RS-485 Converter
PDA8485-I	USB to RS-485 Isolated Converter
PDA6846	Steel 2" U-Bolt Kit. All Material: Zinc Plated Steel; (1) U-Bolt for 2" Pipe with (2 each) Washers, Lock Washers, and Nuts.
PDA6846-SS	Stainless Steel 2" U-Bolt Kit. All Material: Stainless Steel; (1) U-Bolt for 2" Pipe with (2 each) Washers, Lock Washers, and Nuts.
PDA-SSTAG	Custom Stainless Steel Tag (see website for convenient ordering form)

PDA1024-01 24 VDC Power Supply

The PDA1024-01 is a DIN rail mounted 1.5 A, 24 VDC power supply that can be used to power the PD6730X.

PDA8068 USB Serial Adapter

The PDA8068 USB serial adapter is used to connect the PD6730X directly to a computer via USB. It is intended to be used for programming only. No live monitoring is possible with this module.

PDA6846 2" U-Bolt Kits

The PDA6846 U-Bolt Kits provide a convenient way to mount the PD6730X to 1.5" or 2" pipes. They are available in steel and stainless steel.

PDA-SSTAG Stainless Steel Tag

The PDA-SSTAG is a laser etched stainless steel tag that can be customized with three lines of text. Each tag comes with a stainless steel wire and lead seal for easy mounting wherever you need.

Table of Contents

Table of Figures

Specifications

Except where noted all specifications apply to operation at +25°C.

General

Display	Top Display	Five digits, (0-99999), 0.7" (17.8 mm) high, 7- segment, automatic lead zero blanking.
	Bottom Display	Seven alphanumeric characters, 0.4" (10.2 mm) high, 14-segment, automatic lead zero blanking.
	Symbols	High alarm, low alarm, SafeTouch button sleep mode/disable, password lock
Feet & Inches Display (-L Models)	Top Display	Feet & Inches, 0.60" (15.2 mm) high, 0 to 399FT 11 15/16 IN 7-segment, programmable 1/16 or 1/8 fraction display
	Bottom Display	Seven Characters, 0.4" (10.2 mm) high, 14-segment, 7-digits
	Tank Level Indicator	20-segments, F (Full) and E (Empty)
	Alarm Indication	High and low alarm
	Backlight	White
Display Assignment	Top and Bottom Display*: Process Variables (PV); Alternating PV and Units, Tag and PV, or Tag, PV, and Units. Bottom Display: All Top Display Options or Off Units and tag independent for each PV. * On feet and inches display models, top display used only for level Modbus process variables or math channels.	
Backlight	White; it can be disabled/enabled in the Advanced - System menu. The backlight is automatically turned off below -20°C.	
Alarm Indication	Flashing display plus HI/LO indicators	
Scan and Update Rate	Ambient > -20°C: Modbus PV scan rate programmable from 2 to 99 seconds per PV. Tag and units programmable for 1 to 5 second alternation. Ambient < -20°C: All Modbus scan, alternating units and tags 1 update/10 seconds minimum.	
Underrange	Upper Display: Decimal display flashes -9999 Level display flashes to 399FT 11 15/16 IN Lower Display: Flashes -999999	
Overrrange	Upper Display: Decimal display flashes 99999 Level display flashes to 399FT 11 15/16 IN Lower Display: Flashes 999999	
Programming Method	Four SafeTouch through-window buttons when cover is installed. Four internal pushbuttons when cover is removed. Free ScanView EX software.	

Password	Restricts modifications of programmed settings to require re-entering the password to make changes.	
Input Power	9-30 VDC, 2.2 W	
Data Logging	Up to 511 records, recorded 4/day at specific times or at defined time intervals. Record contains first eight enabled Modbus PVs; C1-4 if enabled; date; time, and log number.	
Isolation	All Models:	500 V power-to-RS-485 serial communications
	-AXA Models:	500 V power-to-analog output
Environmental	Operating temperature range: -40 to 75°C Storage temperature range: -40 to 75°C Backlight deactivated below temperatures ≈ -20°C Relative humidity: 0 to 90% non-condensing Printed circuit boards are conformally coated.	
Non-Volatile Memory	All programmed settings are stored in non-volatile memory for a minimum of ten years if power is lost.	
Connections	Screw terminals accept 12 to 22 AWG wire	
Enclosure	NEMA 4X, IP66 plastic field enclosure, polycarbonate with UV stabilizer. Color: grey. Window: Clear polycarbonate with UV stabilizer. Three ¾" NPT threaded conduit openings. Two ¾" NPT plastic conduit plugs included.	
Tag or Tamper Seal Loop	Loops molded into base and cover of enclosure for tamper wire or tags.	
Mounting	May be mounted directly to conduit. Two slotted flanges for wall mounting or NPS 1½" to 2½" or DN 40 to 65 mm pipe mounting. See *Dimensions* on page *12*.	
Display Orientation	Display may be mounted at 90° increments up to 270° from default orientation.	
Overall Dimensions	5.67" x 5.25" x 4.18" (W x H x D) (144 mm x 133 mm x 106 mm)	
Weight	1.65 lbs (26.4 oz, 0.75 kg)	
Warranty	3 years parts and labor. See Warranty Information and Terms & Conditions on www.predig.com for complete details.	

Modbus Operating Modes

Master	Processes and displays data read from Modbus RTU slave devices. Up to 16 process variables (PVs) from up to 16 slave devices. Each PV programmed individually.
Slave	Processes data sent to it from a Modbus RTU master device. Note: Refer to Modbus Register Tables at https://www.predig.com for details.
Snooper	Listens to the Modbus traffic and picks up a specific register or registers being polled by a Master device from a specific slave device and processes the data being read. Up to 16 process variables (PVs) from up to 16 devices. If multiple registers are polled by the master with one command, only the first returned value will be read.
Master Poll Time	0.1 to 99.9 sec. Time between read-commands.
Master Timeout	0.1 to 99.9 seconds. Time elapsed after a poll request is made before the scanner considers that request to have failed.
Number of Retries	1-99. The number of retries the scanner will make when requesting data before reporting an error condition on the PV.
Snooper Response Time	0.1 to 99.9 seconds. Time since the last PV update the before being considered an error.
Slave Timeout	0.0 to 99.9 seconds. Time elapsed after the last data received from a master before the scanner considers the data to be out of date. Programming 0 disables the timeout, and PV data will be displayed indefinitely despite not being updated regularly.

Serial Communications

Protocol	Modbus® RTU
Scanner Id	1 – 247. Specifies the address of the PD6730X.
Baud Rate	1,200; 4,800; 9,600; 19,200; 38,400; 57,600; or 115,200 bps
Transmit Time Delay	Programmable between 0 and 199 ms
Parity/Stop Bit	Even, odd, none with 1 stop bit, or none with 2 stop bits
Byte-to-Byte Timeout	Max of 1.5 character times or 750 µs

Note: Refer to Modbus Register Tables at www.predig.com for details.

Modbus Scanner Process Variables

PV Inputs	Up to 16 independently programmed Modbus process variables (PVs) may be scanned (Master mode) or detected (Snooper mode). Each of the 16 Modbus PVs may be enabled or disabled.
Slave Id	Specifies which device on the bus to monitor. Valid for Master and Snooper modes only. Assign the slave ID or address (1-247) of each of the devices containing the process variables to be displayed (Slave ID for PV1-16).
Register Number	Specifies which register(s) to read in the devices on the bus. 5 Digit Function 03: 40001–49999; 04: 30001–39999; or 65: 1–9999. 6 Digit Function 03: 400001–465535 or 04: 300001–365535; or 65: 1–65535. Range is dependent on Function Code selection (03, 04, or 65) Will read 2 registers for Long integer and Floating point data types; the register entered and the next consecutive register number. Valid for Master and Snooper modes only.
Function Code	03, 04, and 65 (used to read 32 bit registers). Master & Snooper modes only.
Data Type	Select the data format of the PVs. Select between short integer (2 byte), long integer (4 byte), or floating point (4 byte). Slave mode uses floating point only.
Byte Order	Integer data programmable as binary or BCD, and signed or unsigned. Byte order selectable as big-endian (1234), little-endian (4321), byte swap big-endian (2143), or byte swap little-endian (3412). Byte swap unavailable for short.

Math Channels

Math Result Chanels	Four math channels CV1-CV4. Each math channel may be programmed for a math function.
Math Functions	Parameter 1 (PAR1), parameter 2 (PAR2), and parameter 3 (PAR3) independently programmable for each math channel C1-C4.

Math Function	*Function*	*Setting*
Addition	PAR1 + PAR2	SUM
Difference	PAR1 - PAR2	DIF
Multiplication	PAR1 * PAR2	MULTI
Division	PAR1 / PAR2	DIVIDE
Absolute diff.	Abs(PAR1 - PAR2)	DIFABS
Weighted avg.	((PAR1 – PAR2)*PAR3) +PAR2	WAVG
Draw	((PAR1 / PAR2) – 1) * PAR3	DRAW
Ratio	(PAR1 / PAR2) * PAR3	RATIO
Concentration	PAR1 / (PAR1 + PAR2) * PAR3	CONCEN
Constant	Constant	CONST
Long Integer	Constant	LONG
Floating Pt.	Constant	FLOAT
None	Disable	NONE
Absolute Value	Abs(PAR1)	ABS
Square Root	√(PAR1)	SQrt

Parameter Selection	Parameter 1 (PAR1), parameter 2 (PAR2), and parameter 3 (PAR3) selectable as: Modbus PV1-16, math channel CV1-4 or any math function.
Parameter Nested Math	Defining parameter 1 or 2 as a math function will prompt for level 2 parameter 1 (L2P1), level 2 parameter 2 (L2P2), and/or level 2 parameter 3 (L2P3). Level 2 parameters function identically as parameter 1 and 2 for nested math functions.

4-20 mA Transmitter Output

Output Source	Modbus PV 1-16, math channel 1-4, or disabled
Scaling Range	4.000 to 20.000 mA for any display range.
Disable	If disabled, the output will output 3.2 mA
Calibration	Factory Calibrated: 0.0 to 1000.0 = 4-20 mA output
Underrange	Output Underrange: 3.8 mA
Overrange	Display Overrange: 20.5 mA Output Overrange: 20.5 mA
Accuracy	± 0.05% span ± 0.004 mA
Temperature Drift	0.08 µA/°C max from -40 to 75°C ambient
External Loop Power Supply	30 VDC maximum

Output Loop Resistance	Power supply	Minimum	Maximum
	24 VDC	10 Ω	750 Ω
	30 VDC	100 Ω	1100 Ω

Note: loop-powered backlight subtracts 150 Ω from maximum resistance figures above.

Open Collector Outputs

Output Assignment	Two open collector pulse outputs. Individually programmable for Modbus PV, math channel, constant timed pulse output; quadrature outputs (requires Out 1 and Out 2), or off.
Rating	Isolated open collector, sinking NPN, 30 VDC @ 150 mA max.
Alarm Output	Assign to Modbus PV 1-16 or math channel 1-4, for high or low alarm trip point.
Alarm Deadband	0-100% FS, user selectable
Alarm Acknowledge	Front panel ACK button resets output and screen indication.
Pulse Output Count	The pulse output count (COUNT) is programmable from 0.000001 to 9999999. PV and math channels generate a frequency equal to the PV or math value divided by the Count value.
Pulse Output Pulse Width	Unless otherwise stated, pulses are 50% duty cycle for required frequency.
Pulse Output Maximum Frequency	5 kHz, pulse width at 50% duty cycle. If the outputs exceed 5 kHz, the scanner will display PULSE OVERRNG
Quadrature Output	Output set to quadrature will lag the other pulse output by 90° (1/4 duty cycle) at output frequency. Minimum 1 Hz
Timer Output	Programmable on and off time, repeating cycle. Minimum period 0.1 second, maximum 100,000 seconds. Minimum pulse time 0.01 second, maximum 10,000 seconds.

ScanView EX Programming Software

System Requirements	Windows® 7/8/10 (Windows 32-bit or 64-bit operating systems)
Communications	PDA8068 Meter-to-USB Adapter for programming, PDA7485-I RS-232 to RS-485 Isolated Converter (Cable not included), PDA8485-I USB to RS-485 Isolated Converter (Cable not included).
Protocol	Modbus RTU
Scanner Address	1-247
Baud Rate	1200 bps to 115,200 bps
Configuration	Configure one scanner at a time. File format: Saved as “.mve". Printing: Configuration can be printed. Monitor file format: Saved as ".mcf".
Data Logging Report	Saved as “.csv” file format.

The *Monitor* window is used for monitoring up to 16 process variables; each is programmed individually to display information in selected engineering units with custom tags.

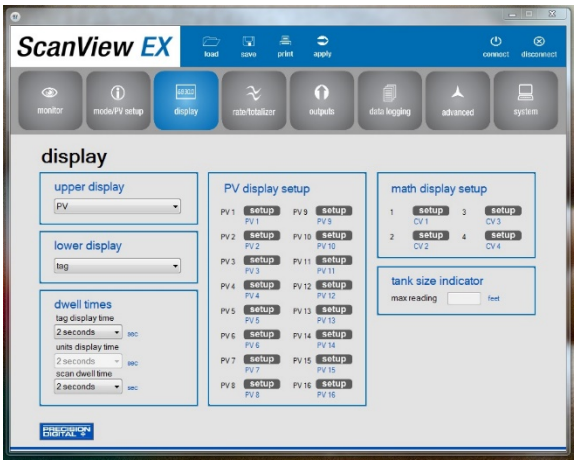

The *Display* window is used for programming the upper display, lower display, dwell times, PV display setup, math display setup, and tank size indicator.

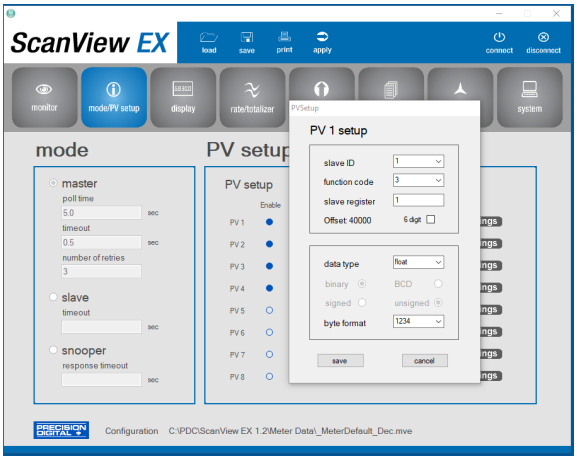

The *Mode/PV* Setup window is used for selecting master, slave, or snooper modes and setting up from 1-16 PVs.

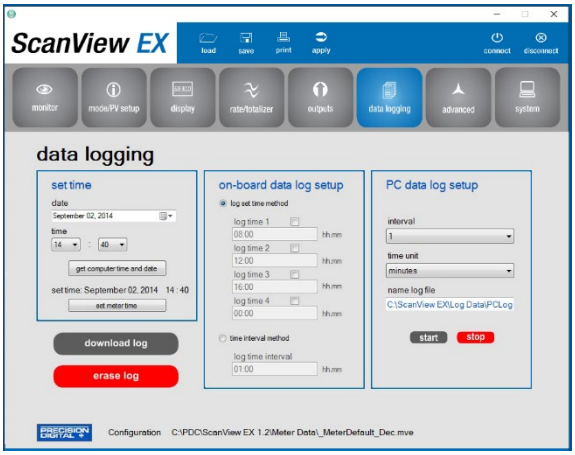

The Data Logging window is used to set the computer and meter time/date, set the on-board data log set time or time interval method, set PC data log intervals and time units, and manual control of PC data log with start/stop buttons.

For detailed programming software instructions or to download ScanView EX software, visit predig.com/scanview-ex.

Safety Information

WARNINGS

- Read complete instructions prior to installation and operation of the scanner.
- Installation and service should be performed only by trained service personnel. Service requiring replacement of internal components must be performed at the factory.
- If the scanner is installed in a high voltage environment and a fault or installation error occurs, high voltage may be present on any lead.

Tag and Tamper Seal Loop

The PD6730X comes with tag and tamper seal loops molded into the plastic enclosure. One loop is located on the cover of the enclosure and the other one is on the base of the enclosure. These are used for inserting a stainless steel wire through the holes and attaching a lead seal to prevent unauthorized removal of the enclosure cover. A custom stainless steel tag (PDA-SSTAG) can also be attached to the wire.

PDA-SSTAG Stainless Steel Tag

The PDA-SSTAG is a laser etched stainless steel tag that can be customized with three lines of text. Each tag comes with a stainless steel wire and lead seal for easy mounting wherever you need.

Dimensions

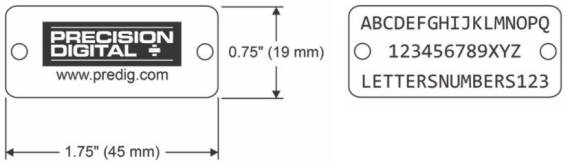

Ordering Guide

PDA-SSTAG	Custom Stainless Steel Tag (see website for convenient ordering form)

When ordering custom tags, enter your custom text in the available form located at predig.com/PDA-SSTAG or click here to download the Stainless Steel Tag Order Form

Installation

WARNING

- Hazardous voltages may exist within enclosure.
- Installation and service should be performed only by trained service personnel.

Wiring connectors are accessed by opening the enclosure. To access electrical connectors, remove the two captive screws, then disconnect the ribbon cable from the display module and set the display module aside.

Unpacking

Remove the scanner from box. Inspect the packaging and contents for damage. Report damages, if any, to the carrier.

If any part is missing or the scanner malfunctions, please contact your supplier or the factory for assistance.

Conduit Plugs

The PD6730X is supplied with two IP68 rated conduit plugs for installations that require the use of only one conduit entry. The conduit/stopping plugs have 1.29" wrenching flats and a screwdriver slot.

Mounting

The PD6730X has two slotted mounting flanges that may be used for pipe mounting or wall mounting. Alternatively, the unit may be supported by the conduit using the conduit holes provided.

Refer to *Figure 1*.

WARNING

- Do not attempt to loosen or remove flange bolts while the scanner is in service.

Dimensions

All units: Inches (mm)

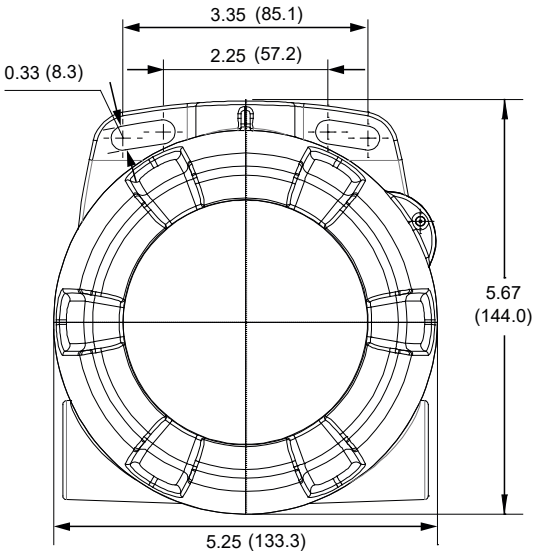

Figure 1. Enclosure Dimensions – Front View

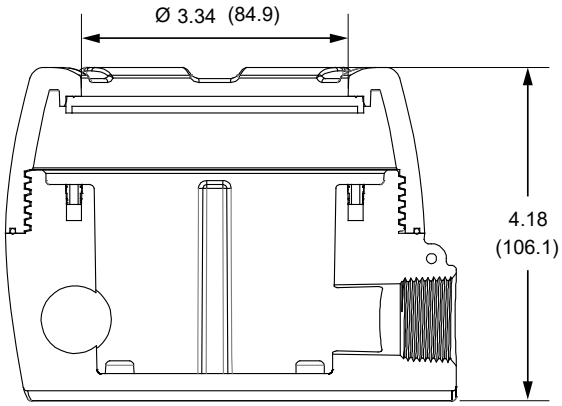

Figure 2. Enclosure Dimensions – Side Cross Section View

Connections

To access the connectors, remove the enclosure cover and unscrew the two captive screws that fasten the display module into the enclosure. Disconnect the ribbon cable and remove the display module.

RS-485 serial connections are made to a removable terminal block on the back of the display module. Power and signal connections are made to a screw terminal connector in the base of the enclosure.

D+	RS-485 data B (non-inverting) connection
D-	RS-485 data A (inverting) connection
G	RS-485 shield ground connection
P+	DC Power positive terminal connection
COM	DC power supply input return/negative, reset contact closure common
RST	Contact closure reset pull-up to 1.8 VDC
S+	Pulse input signal positive terminal connection (Refer to LIM6730XPulse for instructions).
S-	Pulse input signal negative terminal connection (Refer to LIM6730XPulse for instructions).
OC1+	Open collector output 1 positive terminal
OC1-	Open collector output 1 negative terminal
OC2+	Open collector output 2 positive terminal
OC2-	Open collector output 2 negative terminal
LP+	4-20 mA transmitter output DC power positive terminal connection.
LP-	4-20 mA transmitter output DC power negative terminal connection.

Refer to *Figure 3* and *Figure 4* for terminal positions.

WARNINGS

- Observe all safety regulations. Electrical wiring should be performed in accordance with all agency requirements and applicable national, state, and local codes to prevent damage to the scanner and ensure personnel safety.
- Static electricity can damage sensitive components.
- Observe safe handling precautions for static-sensitive components.
- If the scanner is installed in a high voltage environment and a fault or installation error occurs, high voltage may be present on any lead or terminal.

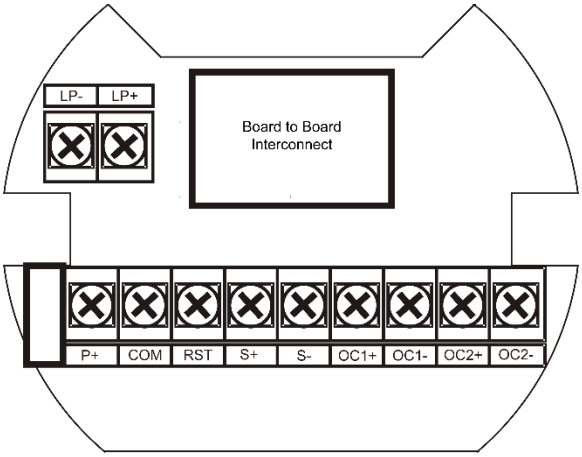

Figure 3. Connector Board Mounted in Base of Enclosure

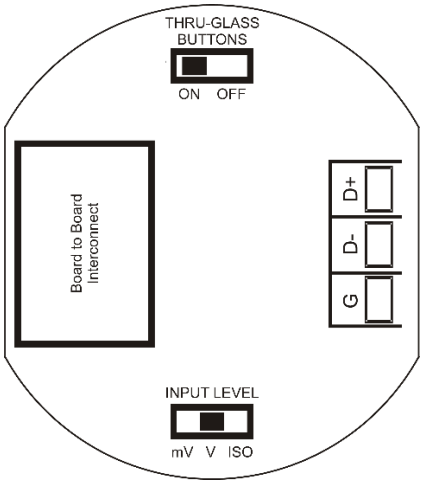

Figure 4. Connectors & Switches on Rear of Display Module

Wiring Diagrams

DC Power Connection

DC power is wired to terminals P+ and COM as shown in *Figure 5*. To maintain input isolation, a separate power supply must be used to power the isolated 4-20 mA transmitter as shown in *Figure 6*.

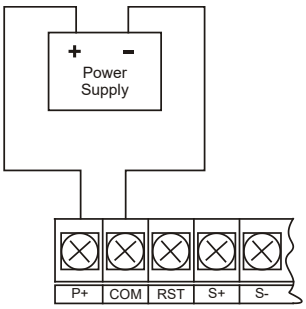

Figure 5. DC Power Connections

4-20 mA Transmitter Output Connections

Output connections are made to two terminals labeled LP+ and LP-. Connect to an input device such as a remote display or chart recorder as shown in *Figure 6*.

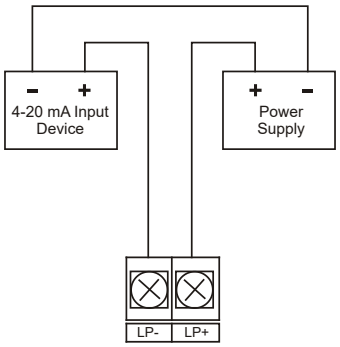

Figure 6. 4-20 mA Output Connections

RS-485 Signal Connections

The scanner includes a 3-wire RS-485 serial connection. The cabling used for an RS-485 serial communications network should always be a high quality cable such as Belden 8162 or Alpha 6203C. A 3-wire system requires two twisted pairs (the extra twisted pair is needed for the signal ground).

Figure 7. RS-485 3-Wire Serial Connections

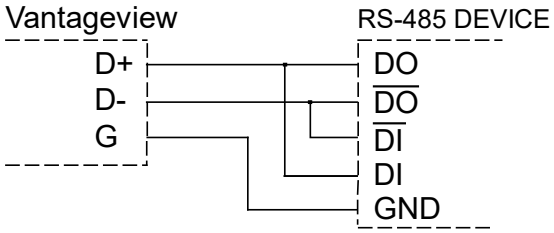

Figure 8. RS-485 5-Wire Serial Connections

Open Collector Output Connections

Open collector output 1 and 2 connections are made to terminals labeled OC1+ and OC1-, and OC2+ and OC2-. Connect the alarm or pulse input device as shown in *Figure 9*.

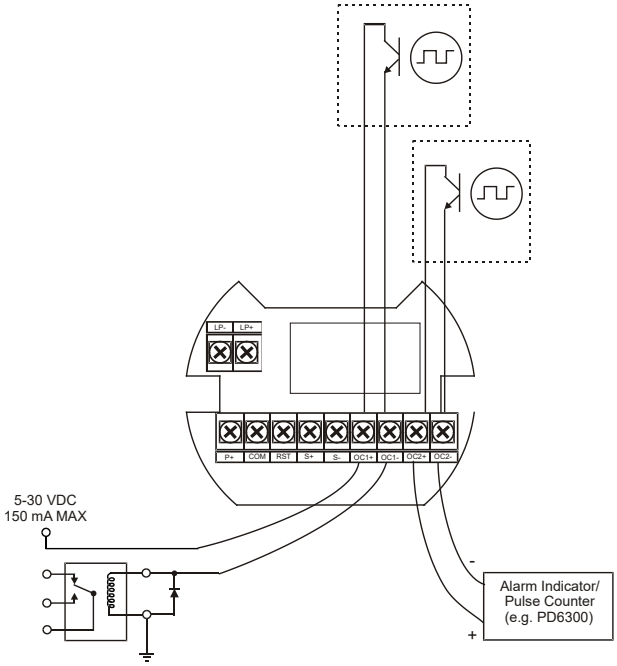

Figure 9. Open Collector Output Connections

Setup and Programming

Overview

Setup and programming is done through the infrared through-window SafeTouch buttons, using the mechanical buttons when uncovered, or with ScanView EX programming software. There are two slide switches located on the display module. One switch is used to lock or unlock the SafeTouch Buttons. The other switch is used to configure the pulse input (Refer to LIM6730XPulse for instructions).

ScanView EX Programming Software

The fastest and easiest way to program the meter is using the free ScanView EX programming software. This software greatly simplifies the programming process and allows the user to save configuration files for later use.

The ScanView EX software requires one of several options to connect to a PC depending on the PC's hardware; The PDA8068 USB serial adapter, PDA7485-I RS-232 to RS-485 converter, or the PDA8485-I USB to RS-485 Isolated Converter to connect the PC to the meter.

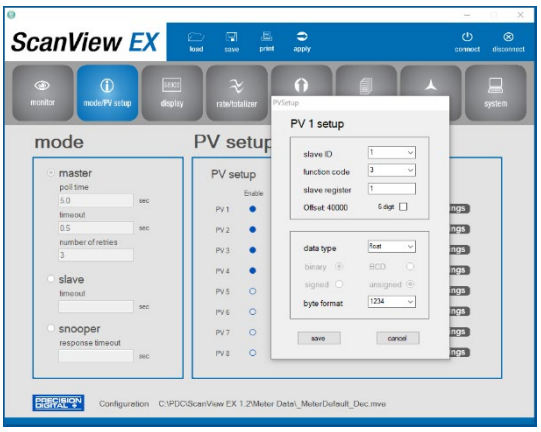

To download the ScanView EX programming software, visit predig.com/scanview-ex.

SafeTouch Buttons

The PD6730X is equipped with four sensors that operate as through-window buttons so that it can be programmed and operated without removing the cover (and exposing the electronics). These buttons can be disabled for security by using the THRU-GLASS BUTTONS switch and selecting the OFF setting. This switch is located on the back of the removable electronics module.

SafeTouch Button Operation

To actuate a button, press and remove one finger to the window directly over the marked button area. Remove finger to at least 4 inches away from the window in between button activations. SafeTouch and mechanical buttons may be held to cycle through menus or digits in place of repeatedly pushing a button.

⏻ SafeTouch Power Save Mode (Symbol shown on -2 decimal models only)

SafeTouch buttons enter a power saving mode after three minutes of inactivity. This mode is indicated by a power symbol (⏻) appearing in the lower right of the display. Only the **MENU** button is monitored in this mode. To activate the SafeTouch buttons, press and hold the menu button for up to five seconds. The display will read AWAKE, and the SafeTouch buttons will be fully enabled.

SafeTouch Disabled Mode

When the cover is removed, the four mechanical buttons located next to the sensors may be used. The sensors are disabled when a mechanical button is pressed and will automatically be re-enabled after 60 seconds of inactivity. The SafeTouch power symbol (⏻) will blink in the lower right of the display if the buttons are disabled due to a mechanical pushbutton being pressed.

SafeTouch Button Equalize Delay

The SafeTouch buttons are designed to constantly recalibrate for ambient conditions. When the cover position is changed, the cover is removed, or an object is removed that was placed over the front window, it may take a moment for the SafeTouch buttons to recalibrate to the change in conditions.

Allow up to 2 minutes for the SafeTouch buttons to recalibrate to new conditions in these cases where the cover position was changed, or the front window is being unblocked.

⚠ IMPORTANT

- SafeTouch will not work if two or more buttons are detected as being pressed simultaneously. Be careful to avoid triggering multiple buttons or reaching across one button location to press another.

SafeTouch Button Tips and Troubleshooting

The SafeTouch Buttons are designed to filter normal levels of ambient interference and to protect against false triggering, however it is recommended that the SafeTouch Buttons be turned off (slide THRU-GLASS BUTTONS switch to OFF) if there is an infrared interference source in line-of-sight to the display or if the buttons are not needed.

SafeTouch Button Tips:

- To the extent possible, install the display facing away from sunlight, windows, reflective objects, and any sources of infrared interference.
- Keep the window clean.
- Tighten the cover securely.
- Use a password to prevent tampering.
- If the cover has not been installed and secured tightly, it may take a moment for the SafeTouch buttons to properly self-calibrate when the cover is tightened.

After all connections have been completed and verified, connect the ribbon cable to the display module, fasten the display module to the base, install enclosure cover, and then apply power.

SafeTouch Button Equalize Delay

The SafeTouch buttons are designed to constantly recalibrate for ambient conditions. When the cover position is changed, the cover is removed, or an object is removed that was placed over the front window, it may take a moment for the SafeTouch buttons to recalibrate to the change in conditions.

Allow up to 2 minutes for the SafeTouch buttons to recalibrate to new conditions in these cases where the cover position was changed, or the front window is being unblocked.

Buttons and Display

Decimal Display Model

Feet & Inches Display Model

Button Symbol	Description
MENU	Menu / SafeTouch Awake
PREV ▶	Previous PV or Right Arrow
NEXT ▲	Up Arrow or Next PV
SCAN	Enter or Start / Pause Scanning

Decimal Display Symbols (-2 Models)	**Description**
HI	High Alarm
LO	Low Alarm
🔒	Settings Lockout Password Enabled
⏻	SafeTouch Power Save/Disable Flashing: Temporarily Disabled Due to Mechanical Button
Feet & Inches Display Symbols (-L Models)	**Description**
FT	Feet
IN	Inches and Fractional Inches
F	Tank Full Indicator
E	Tank Empty Indicator
HI	High Alarm
LO	Low Alarm

Menu Button

- Hold the **Menu** SafeTouch button when in power save mode (display will show ⏻) to awaken SafeTouch buttons.
- Press the **Menu** button to enter Programming Mode.
- Press the **Menu** button during Programming Mode to return to the previous menu selections.
- Hold the **Menu** button for 1.5 seconds at any time to exit Programming Mode and return to *Run Mode*.
- Press and hold the **Menu** button for 3 seconds to access the *Advanced Features* of the scanner.

Right / Previous Button

- Press **Previous** to manually display the previous PV or input display.
- Press the **Right** arrow button in programming mode to move to the next digit or decimal position.
- Press the **Right** arrow button in programming mode to go backward through most selection menus.

Up / Next Button

- Press **Next** to manually display the next PV or input display.
- Press the **Up** arrow button in programming mode to scroll forward through the menus, decimal point, or to increment the value of a digit.

Enter / Scan Button

- Press **Scan** to pause automatic scanning.
- Press **Scan** to resume automatic scanning when paused.
- Press the **Enter** button in programming mode to access a menu or to accept a setting.

Setting Numeric Values

The numeric values are set using the **Right** and **Up** arrow buttons. Press **Right** arrow to select next digit and **Up** arrow to increment digit.

The digit being changed blinks.

Press the **Enter** button, at any time, to accept a setting or **Menu** button to exit without saving changes.

The decimal point is set using the **Right** or **Up** arrow button in the *Setup, Decimal Point* menu.

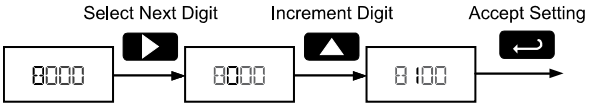

Setting Alphanumeric Labels (LAbEL)

Fully alphanumeric values are set using the **Right** button to select the digit, the **Up** and **Right** arrow buttons to select the digit reading, and the **Enter** button to confirm and select the next digit.

Menus using this entering method include tags and custom units. After selecting the digit, and using the **Up** and **Right** arrows to modify the digit, the display will read CHAr.

Press **Enter** to confirm the new digit and proceed to the next digit.

The digit being changed blinks.

Press the **Menu** button to exit without saving changes.

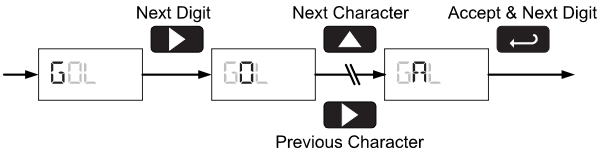

Main Menu

Display Functions & Messages

The scanner displays various functions and messages during setup, programming, and operation. The following table shows the main menu MODE, SETUP, and COMM menu functions and messages in the order they appear in the menu. Functions and messages that appear in the *Advanced* menu can be found in the *Advanced Menu* section on page *35*.

Display	Parameter	Action/Setting
MODE	*Mode*	Enter *Mode* menu
MASTER	*Master Mode*	Select Master mode
PV NUM	*PV Number*	Enter the Modbus PV configuration menu
PV 1	*PV 1 – PV 16*	Enter PV1 to PV16 configuration menus
ENABLE	*Enable*	Enable the Modbus PV
SLAVEID	*Slave ID*	Enter the slave Modbus ID
FUNCODE	*Function Code*	Set the Modbus function code
REG NUM	*Register Number*	Enter the slave register number
DATATYP	*Data Type*	Set the data type
FLOAT	*Float*	Float data type
SHORT	*Short*	Short integer data type
LONG	*Long*	Long integer data type
BINARY	*Binary*	Binary integer type
BCD	*BCD*	Binary coded decimal integer type
UNSIGND	*Unsigned*	Unsigned integer type
SIGNED	*Signed*	Signed integer type
BYTE	*Byte*	Select the byte format
1234	*1243*	Big endian
4321	*4321*	Little endian
2143	*2143*	Big endian with byte swap
3412	*3412*	Little endian with byte swap
DISABLE	*Disable*	Disable the Modbus PV
T POLL	*Poll Time*	Set the Modbus PV poll time
TIMEOUT	*Response Timeout*	Set Modbus communication response timeout
RETRIES	*Retries*	Set number of retires before display a PV communication error
SLAVE	*Slave*	Select Slave mode
PV NUM	*PV Number*	Enter the Modbus PV configuration menu
PV 1	*PV 1 – PV 16*	Enter PV1 to PV16 configuration menus
ENABLE	*Enable*	Enable the Modbus PV
DISABLE	*Disable*	Disable the Modbus PV
TIMEOUT	*Response Timeout*	Set Modbus response error time
SNOOPER	*Snooper Mode*	Select Snooper mode
PV NUM	*PV Number*	Enter the Modbus PV configuration menu
T RESP	*Response Time*	Set Modbus response error time
SETUP	*Setup Menu*	Enter *Setup* menu
DISPLAY	*Display*	Enter the *Display* menu
TOPDSP	*Top Display*	Set the function of the top display
PV	*PV*	Display Modbus PV
PV-U	*PV & Units*	Display Modbus PV and units
TAG-PV	*Tag & PV*	Display tag and Modbus PV
TG-PV-U	*Tag, PV, & Units*	Display tag, Modbus PV, and units
BOTDSP	*Bottom Display*	Set the function of the bottom display
TAG	*Tag*	Display tags
TAG-U	*Tag & Units*	Display tags and units
UNITS	*Units*	Display units
PV	*PV*	Display Modbus PV
TG-PV-U	*Tag, PV, & Units*	Display tag, Modbus PV, and units
OFF	*Off*	Turn off display
PVSETUP	*PV Setup*	Enter the *PV Setup* menu
PV-1	*PV-1 to PV-16*	Select PV1 to PV16
FORMAT	*Format*	Enter PV display format

Display	Parameter	Action/Setting
TAG	*Tag*	Enter to edit PV tag
UNITS	*Units*	Enter to edit PV units
DISP.DP	*Display Decimal Point*	Set the PV display decimal point Note: Not available on Ft-In models.
FLOAT.DP	*Float Decimal Point*	Set the float decimal point location (if PV is float data type only) Note: Not available on Ft-In models.
SCALE	*Scale*	Select the PV display scaling: factor, linear 2-point, or multi-point
FACTOR	*Conversion factor*	Conversion factor scaling
LINEAR	*Linear*	Linear scaling
MP--SCAL	*Multipoint Scaling*	Multipoint scaling for PV1
MATH	*Math*	Enter *Math* menu (Will only appear if at least one math channel is enabled)
CV 1	*CV1 to CV4*	Select math channel to configure CV 1 to CV4
FORMAT	*Format*	Enter CV display format
TAG	*Tag*	Enter the CV tag
UNITS	*Units*	Enter the CV units
DISP.DP	*Display Decimal Point*	Set the CV display decimal point
TANKSZ	*Tank Size*	Enter tank level indicator full value (in feet for Ft & In version only)
T--TAG	*Tag Time*	Enter tag display time
T--UNITS	*Units Time*	Enter unit display time
T--SCAN	*Scan Time*	Enter scan cycle time (e.g. PV dwell time)
PULSE.IN	*Input*	Refer to pulse input manual
COMM	*Communications*	Enter the *Communications* menu
SCAN ID	*Scanner ID*	Enter the scanner's Modbus ID (used if setup as a slave)
BAUD	*Baud Rate*	Select baud rate
TXDELAY	*Transmit Delay*	Enter the transmit delay

Display	Parameter	Action/Setting
PARITY	*Parity*	Select parity mode
EVEN	*Even*	Even parity
ODD	*Odd*	Odd parity
NONE 1	*None, 1 Stop Bit*	No parity, 1 stop bit
NONE2	*None, 2 Stop Bits*	No parity, 2 stop bits

Main Menu Programming

The main menu is used to navigate the programming menus and separates the most commonly used functions. The *Mode* menu is used to setup the scanner as a Modbus master, slave, or snooper, and define Modbus PVs. The *Setup* menu is used to setup general scanner parameters, such as display assignments. The *Comm* menu configures the RS-485 serial communications settings. The *Advanced* menu is used to configure more complex settings not used with most common applications.

Press **Menu** button to enter Programming Mode then press the **Up** arrow button to scroll through the main menu.

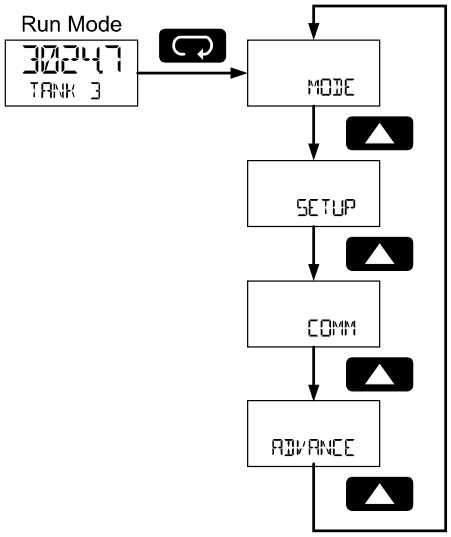

Press **Menu**, at any time, to return to the previous menu selection. Press and hold the **Menu** button for 1.5 seconds at any time to return to Run Mode.

Changes to the settings are saved to memory only after pressing **Enter**.

The display moves to the next menu every time a setting is accepted by pressing **Enter**.

IMPORTANT

- The Advanced menu contains parameters not required for all applications. The setup of features and functions detailed in the Advanced features menu are found in the *Advanced Menu Programming* (ADVANCE) section on page *37*.

Select Operating Mode (MODE)

The *Mode* menu is used to select master, slave, or snooper operating mode. Only one of these modes may be used. The programming of each mode is detailed below.

Master mode is used to configure the scanner as a Modbus master. It will poll up to 16 registers in up to 16 Modbus slave devices. Slave mode is used to configure the scanner as a Modbus slave. A Modbus master must be used to send data to the Modbus registers of the scanner for display. Snooper mode is used to listen for data polled by a Modbus master on the Modbus network. The scanner will detect up to 16 Modbus registers polled by the master.

Press the **Enter** button to access any menu or press the **Up** arrow button to scroll through choices.

Press the **Menu** button to back out of a menu or hold the **Menu** button to exit at any time.

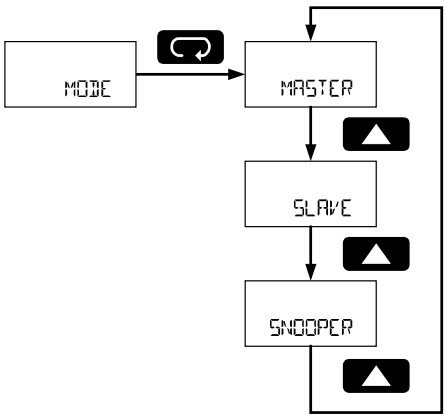

Master Mode (MASTER)

In Master mode, the scanner will poll up to 16 Modbus registers in up to 16 Modbus devices. It will serve as a Modbus network master; polling Modbus slave devices for Modbus process variables (PVs) that can be displayed or used in the math functions.

Programming the Modbus Master mode will include defining the Modbus PV registers and devices, selecting the polling time interval, and the maximum response time allowed.

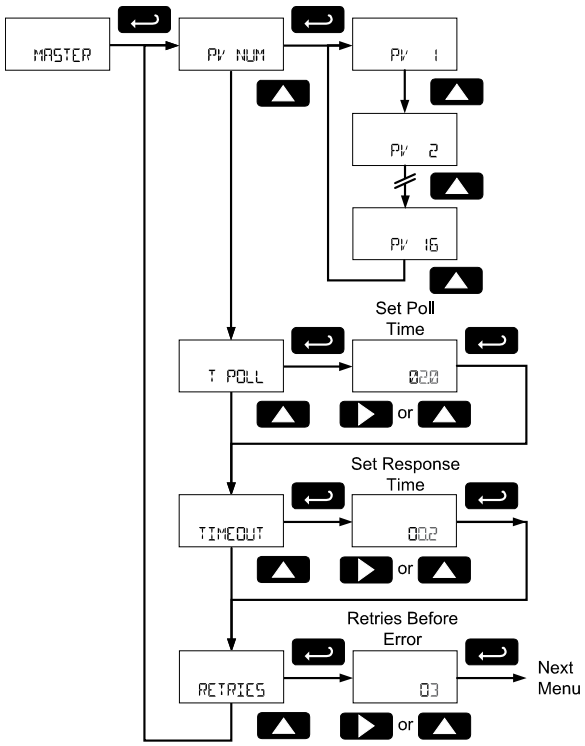

PV Number Configuration (PV NUM)

The *PV Number* menu is used to enable and disable each Modbus PV 1 to PV 16. The Modbus device and registers are configured for each of the enabled PVs. PVs that are not enabled will not appear in other programming menus for display or inclusion in math channel functions (CV).

PV1 to PV16 are programmed using identical menus.

⚠ IMPORTANT

- To enable a PV it must be assigned to a specific slave ID.

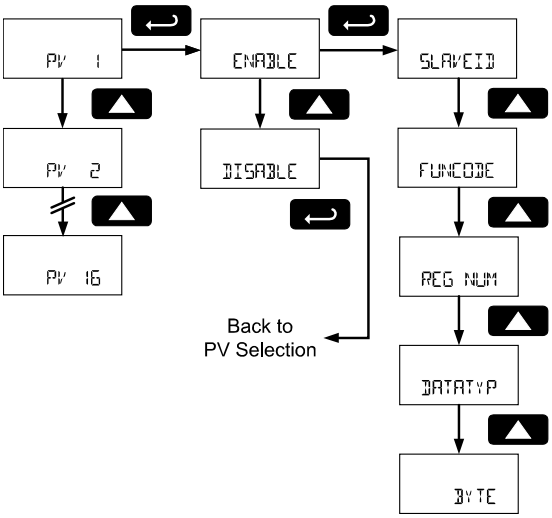

Enable/Disable PV (ENABLE, DISABLE)

Enable or disable the Modbus PV. Disabled PVs will require no additional configuration. Disabled PVs will not be accessible in other menus or functions.

Slave ID (SLAVEID)

Enter the Modbus ID of the slave device that contains the PV information.

Function Code (FUNCODE)

Select the Modbus function code necessary to read the device. Use the **Up** and **Down** arrows to select the appropriate function code, and press **Enter** to accept the function code.

See the *PD6730X Modbus Register Table* available at www.predig.com for more information on function codes.

Register Number (REG NUM)

Enter the Modbus register number of the PV information on the Modbus slave device defined in the *Slave ID* parameter.

Select 5-Digit or 6-Digit Register Number

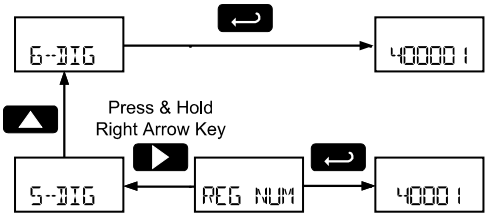

Data Type (DATATYP)

Enter the data type of the PV information in the Modbus register. Selectable data types are float, short integer, and long integer.

Use the **Up** and **Down** arrows to select the appropriate data type and press **Enter** to accept.

For short and long integer types, select binary or binary coded decimal (BCD) formats as well as signed or unsigned data format.

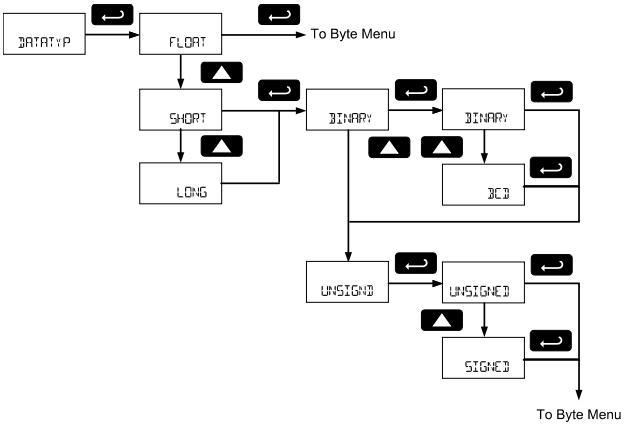

Byte Format (BYTE)

Select the PV data byte format as it is stored in the Modbus slave device data register. Use the **Up** and **Down** arrows to select the appropriate data type related to endianness and byte order.

Byte Selection	Byte Type	Description
1234	1234	Big endian
4321	4321	Little endian
2143	2143	Big endian with byte swap
3412	3412	Little endian with byte swap

Poll Time (T POLL)

Enter the time between read command sequences. In other words, how often the display values are updated in Master mode. The poll time defines how often the device will begin scanning all enabled Modbus PVs. For example, if the *Poll Time* is two seconds, the scanner will begin polling all Modbus PVs every two seconds.

This parameter defines the approximate time between updates of a PV value. Communications errors may make updating a PV take longer.

⚠ IMPORTANT

Note: Depending on the Response Timeout, and the number of PV poll requests that time out, it may take more than one poll time to poll all enabled Modbus PVs. In this scenario, the scanner will begin another round of polling at the next poll time interval.

For example: Due to transmission errors, the scanner with a 2 second poll time requires 2.5 seconds to update all the Modbus PVs. It will begin the second polling of all the Modbus PVs at 4 seconds.

Note: In the feet and inches display models enter this value in the format XX.X seconds, but no decimal point is present in the display. For example: enter 20 for a poll time of 2.0 seconds.

Response Timeout (TIMEOUT)

Enter the time the scanner will wait after a request for information has been sent to a slave device before it will assume an error on that request. Increasing the timeout will help eliminate polling errors when polling slow devices. Increasing the response timeout will also slow the PV update rate in systems that are experiencing communications failures.

Note: The feet and inches display models enter this value in the format XX.X seconds, but no decimal point is present in the display. For example: enter 20 for a poll time of 2.0 seconds.

Retries Before Error (RETRIES)

Enter the number of consecutive failures to poll a device that will result in a communications error message on the display. This is the number of times a specific PV must be polled before the display indicates a communication failure rather than displaying the available PV data. Increasing this number will allow for more polling failures before a communication error is detected, which may be required for some unreliable networks. Increasing this number will also increase how long old data is displayed before a communication error is indicated.

Slave Mode (SLAVE)

In Slave mode, a Modbus master may write up to 16 Modbus PVs to the scanner, which can then display and process the data in the PV Modbus registers, such as displaying the data and using them in math functions.

Programming the scanner for Modbus Slave mode will include defining the Modbus PV registers that are enabled, as well as selecting the time between data writes before an error is assumed. In Slave mode the scanner accepts floating point data (Byte order: 1234 big endian).

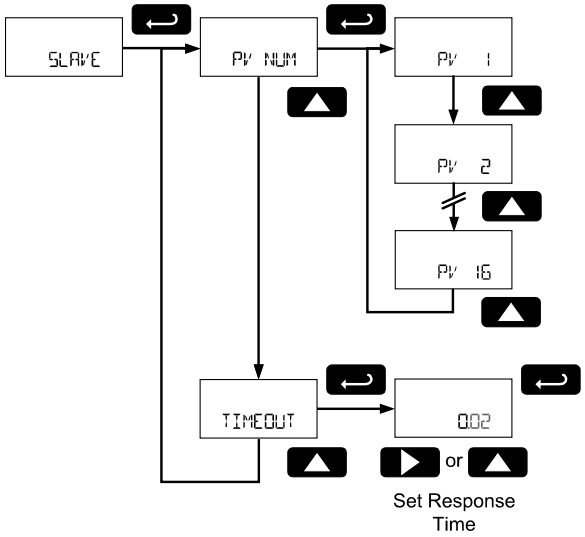

PV Number Configuration (PV NUM)

The *PV Number* menu is used to enable and disable each Modbus PV 1 to 16. PVs that are not enabled will not appear in other programming menus for display or inclusion in math channel functions (CV). PV1 to PV16 are programmed in identical menus.

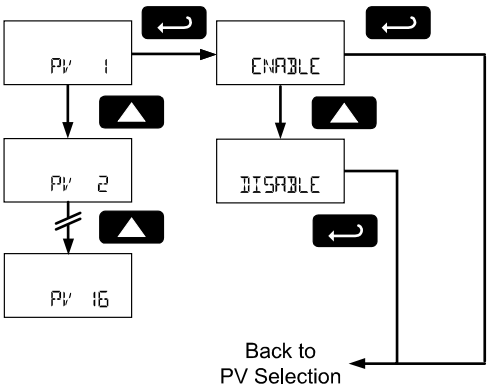

Enable/Disable PV (ENABLE, DISABLE)

Enable or disable the Modbus PV. Disabled PVs will require no additional configuration. Disabled PVs will not be accessible in other menus or functions.

The Slave mode accepts floating point data type (Byte order: 1234 big endian).

Slave Response Timeout (TIMEOUT)

If the Modbus data registers for the enabled Modbus PVs are not updated within a certain period of time, the scanner can presume that there is an error with the data, or that it is too out of date to be worth displaying. In this case, the scanner will display this PV as NONE (NONE).

At the *Response Timeout* menu, enter the time limit for the scanner to continue to display data written to the Modbus PV register. To disable this feature, and always display the last data written to the Modbus register regardless of how long ago the data was updated, set this value to 0 seconds.

Snooper Mode (SNOOPER)

In Snooper mode, the scanner will act as a Modbus network packet sniffer. The Snooper mode is used to listen to data being transmitted on the bus. Up to 16 process variables may be read from the RS-485 bus and displayed or used in math functions. The same process variables can be displayed in multiple locations.

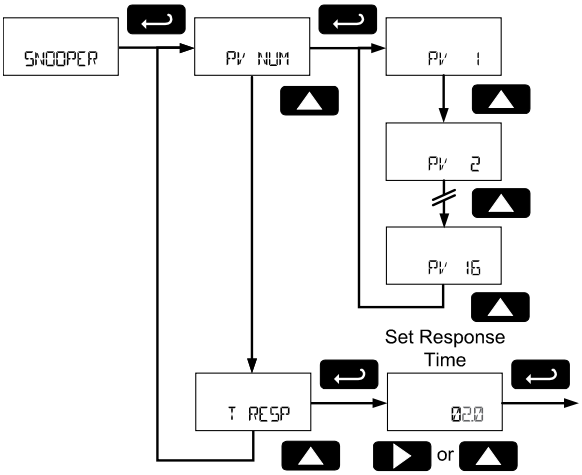

Notes:

The poll time for scanners set up for Snooper mode must be greater than the Master's poll time. This setting corresponds to the time window during which the Snooper listens to the bus for a reply by the slave device being polled by the master device. As soon as the Snooper detects a new reply on the bus, the display is updated. If there is no reply within the Response Time setting, the Snooper goes into communications break condition.

To minimize the possibility of communication errors and communication break conditions, use a poll time of 5 seconds or more with slow baud rates (e.g. 4800 bps or less).

IMPORTANT

- If multiple registers are polled by the master with one command, only the first returned value will be read.
- To snoop multiple PVs, the master must request one PV at a time.

Snooper Mode PV Configuration (PV NUM)

The *PV Number* menu is used to enable and disable each Modbus PV 1 to PV 16. This menu is identical in Master mode. Refer to *PV Number Configuration* (PV NUM) on page *22*.

Snooper Mode Response Time (T RESP)

If the Modbus data registers for the enabled Modbus PVs are not updated within a certain period of time, the scanner can presume that there is an error with the data. After this time has passed, and updated data has not been detected on the Modbus network, the scanner will display this PV as NONE (NONE).

At the *Response Time* menu, enter the time limit the scanner will display the Modbus PV register last data monitored before it assumes an error.

Setup the Display (SETUP)

The *Setup* menu is used to select what information will be displayed on the top and bottom display.

The *Display* menu is used to select the top and bottom display to show Modbus PVs and math channels, and combinations of units and tags. The math channels are configured in the *Advanced Features* menu.

IMPORTANT

- The *Pulse Input* menu is not described or used in this manual.
- For instructions on how to use and configure the pulse input, refer to the LIM6730XPulse manual.

Press the **Enter** button to access any menu or press the **Up** arrow button to scroll through choices.

Press the **Menu** button to back out of a menu or hold the **Menu** button to exit at any time.

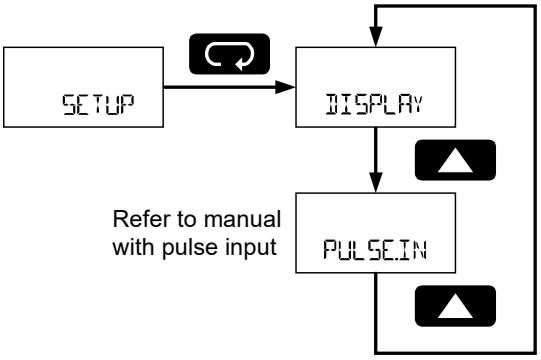

Setting Up the Display (DISPLAY)

The *Display* menu is used to set parameters to show on the top and bottom displays; select which PVs will appear on the top and bottom displays; set how long to display the tags and units; and program the scan time for each channel (how long a specific channel will display before moving to the next value).

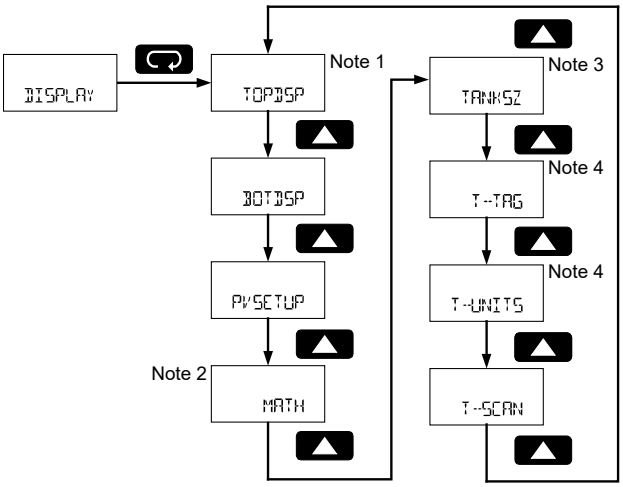

Note 1: The Top Display menu does not appear on feet and inches display models.

Note 2: The math menu (MATH) is only visible if a math channel has been enabled. See Math Channel (CV1 to CV4) Programming (MATH) on page 41 for details about enabling the math channels.

Note 3: The Tank Size menu appear only in Feet and Inches Display Models.

Note 4: The Tag Time and Units Time menus will not appear unless the Top Display or Bottom Display parameters are set to display or alternate a tag or unit.

Top Display (TOPDSP)

Note: The Top Display menu does not appear on feet and inches display models.

The *Top Display* menu sets what Modbus PV information will be displayed on the top display. A combination of Modbus PVs, tags, and units can be selected to appear individually or as an alternating display.

See *PV Setup* menu for details on selecting what Modbus PVs appear on the top and bottom display.

Press **Enter** to access the *Top Display* menu and **Up** button to scroll through choices. Press **Enter** to make a selection and proceed to the next menu.

Press the **Menu** button to back out of a menu or hold the **Menu** button to exit at any time.

Top Display Selection	Parameter	Description
PV	PV	Display Modbus PVs
PV-U	PV and Units	Display alternating Modbus PVs and units
TAG-U	Tag and Units	Display alternating tags and units for bot-tom Modbus PVs
TAG-PV	Tag and PV	Display alternating tag and Modbus PVs
TG-PV-U	Tag, PV, and Units	Display alternating tag, Modbus PVs, and units

Note: Some top display selections may not appear if no PV is assigned to display on the top display.

Bottom Display (BOTDSP)

The *Bottom Display* menu sets what Modbus PV information will be displayed on the bottom display. The available programming options for the bottom display are determined by the *Top Display* menu setting. For Ft & In level display models, the selections for the *Top Display* menu are fixed. A combination of Modbus PVs, tags, and units can be selected to appear individually or as an alternating display.

A selection without a PV component will use the bottom display to show the unit or tag of the PV displayed on the top display. These will change as the top display PVs are scanned.

See *PV Setup* menu for details on selecting what Modbus PVs appear on the top and bottom display.

Press **Enter** to access the *Bottom Display* menu and **Up** button to scroll through choices. Press **Enter** to make a selection and proceed to the next menu.

Press the **Menu** button to back out of a menu or hold the **Menu** button to exit at any time.

Top Display Selection	Bottom Display Selection	Parameter	Description
Feet & Inches Display Models	TAG	Tag	Display tag
	TAG-U	Tag and Units	Display alternating tag and units
	UNITS	Units	Display units
	PV	PV	Display Modbus PVs
	TG-PV-U	Tag, PV, and Units	Display alternating tag, Modbus PVs, and units
	OFF	Off	Display is turned off during normal operation
PV	UNITS	Units	Display units
	TAG	Tag	Display tag
	TAG-U	Tag and Units	Display alternating tag and units
	OFF	Off	Display is turned off during normal operation
PV-U	TAG	Tag	Display tag
	PV	PV	Display Modbus PVs
	TAG-PV	Tag and PV	Display alternating tag and Modbus PVs
	TG-PV-U	Tag, PV, and Units	Display alternating tag, Modbus PVs, and units
	OFF	Off	Display is turned off during normal operation
TAG-PV	UNITS	Units	Display units
	PV	PV	Display Modbus PVs
	TAG-PV	Tag and PV	Display alternating tag and Modbus PVs
	TG-PV-U	Tag, PV, and Units	Display alternating tag, Modbus PVs, and units
	OFF	Off	Display is turned off during normal operation
TG-PV-U	PV	PV	Display Modbus PVs
	TAG-PV	Tag and PV	Display alternating tag and Modbus PVs
	TG-PV-U	Tag, PV, and Units	Display alternating tag, Modbus PVs, and units
	OFF	Off	Display is turned off during normal operation

Note: Some top display selections may not appear if no PV is assigned to display on the top display.

PV Display Setup (PVSETUP)

The *PV Display Setup* menu is used to configure the display options for each Modbus PV setup in the *PV Number Configuration* (PV NUM) menu on page *22*. For each Modbus PV, this includes selecting the top or bottom display, entering tag and unit, setting the Float data type decimal location (for Float data types only), setting the display decimal point location, and scaling the Modbus PV to display in engineering units.

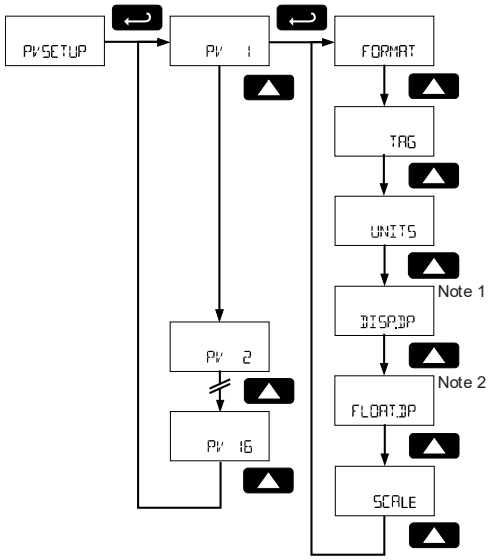

Note 1: Not applicable to feet and inches display models.

Note 2: The Float Decimal Point menu only appears if the PV data type has been set to Float (Not applicable to Ft & In model).

Modbus PV Display Format (FORMAT)

The *PV Display Setup* menu is used to configure the display options for each Modbus PV.

Decimal Display Models

The PV may appear on the top display (TOPDSP) or bottom display (BOTDSP). The PV may also be turned off (OFF) and it will not display; though it may be used in math functions, and the data will be polled if in Modbus Master mode.

Feet and Inches Display Models

The PV may appear on the top feet and inches display with 1/16 of an inch (FtIn16), 1/8 of an inch (FtIn8), or appear on the 7-digit bottom display (DEC) with no decimal points. The PV may also be turned off (OFF) and it will not display; though it may be used in math functions, and the data will be polled if in Modbus Master mode.

Press **Enter** to access the *Format* menu and **Up** button to scroll through choices. Press **Enter** to make a selection and proceed to the next menu.

Press the **Menu** button to back out of a menu or hold the **Menu** button to exit at any time.

Enter Modbus PV Tag (TAG)

Each Modbus PV may have a unique programmable tag to identify the PV while the display is scanning. To program the Modbus PV tag, select the *Tag* menu and press **Enter**.

Program the custom tag as described in *Setting Alphanumeric Labels* (LAbEL) on page *18*. When the label has been programmed, press **Enter** to confirm the label and leave the *Tag* parameter.

Press the **Menu** button to back out of a menu or hold the **Menu** button to exit at any time.

Enter Modbus PV Units (UNITS)

Each Modbus PV may have a unique engineering unit identifier to display while scanning. To program the Modbus PV unit, select the *Units* menu and press **Enter**.

Program the custom unit as described in *Setting Alphanumeric Labels* (LAbEL) on page *18*. When the label has been programmed, press **Enter** to confirm the label and leave the *Units* parameter.

Press the **Menu** button to back out of a menu or hold the **Menu** button to exit at any time.

Set Float Data Type Decimal Point (FLOAT.DP)

This menu is only used if the PV selected was set to a data type of Float in *PV Number Configuration* (PV NUM) on page *22*. To program the Modbus PV float decimal point location, select the *Float Decimal Point menu* and press **Enter**.

Set the decimal point location to correspond to the decimal point location of the float data. Pressing the **Right** arrow moves the decimal point one place to the right (including no decimal point). Pressing the **Up** arrow moves the decimal point one place to the left. Press **Enter** to confirm the number of decimal; points and continue programming.

Set Display Decimal Point (DISP.DP)

Select the display decimal point location for the scaled Modbus PV value.

Decimal Display Models

Select the display decimal point location for the scaled Modbus PV value.

To program the Modbus PV display decimal point location, select the *Display Decimal Point menu* and press **Enter**.

Pressing the **Right** arrow moves the decimal point one place to the right (including no decimal point). Pressing the **Up** arrow moves the decimal point one place to the left. Press **Enter** to confirm the number of decimal; points and continue programming.

Feet and Inches Display Models

On feet and inches display models, this value is fixed, the top display PVs shows feet and inches and the bottom display PVs shows no decimal location.

Scale Modbus PV to Engineering Units (SCALE)

The Modbus PVs may be scaled to reflect different engineering units than the data read out of the Modbus slave device register. To do this, use the *Scale* menu to select the type of scale desired.

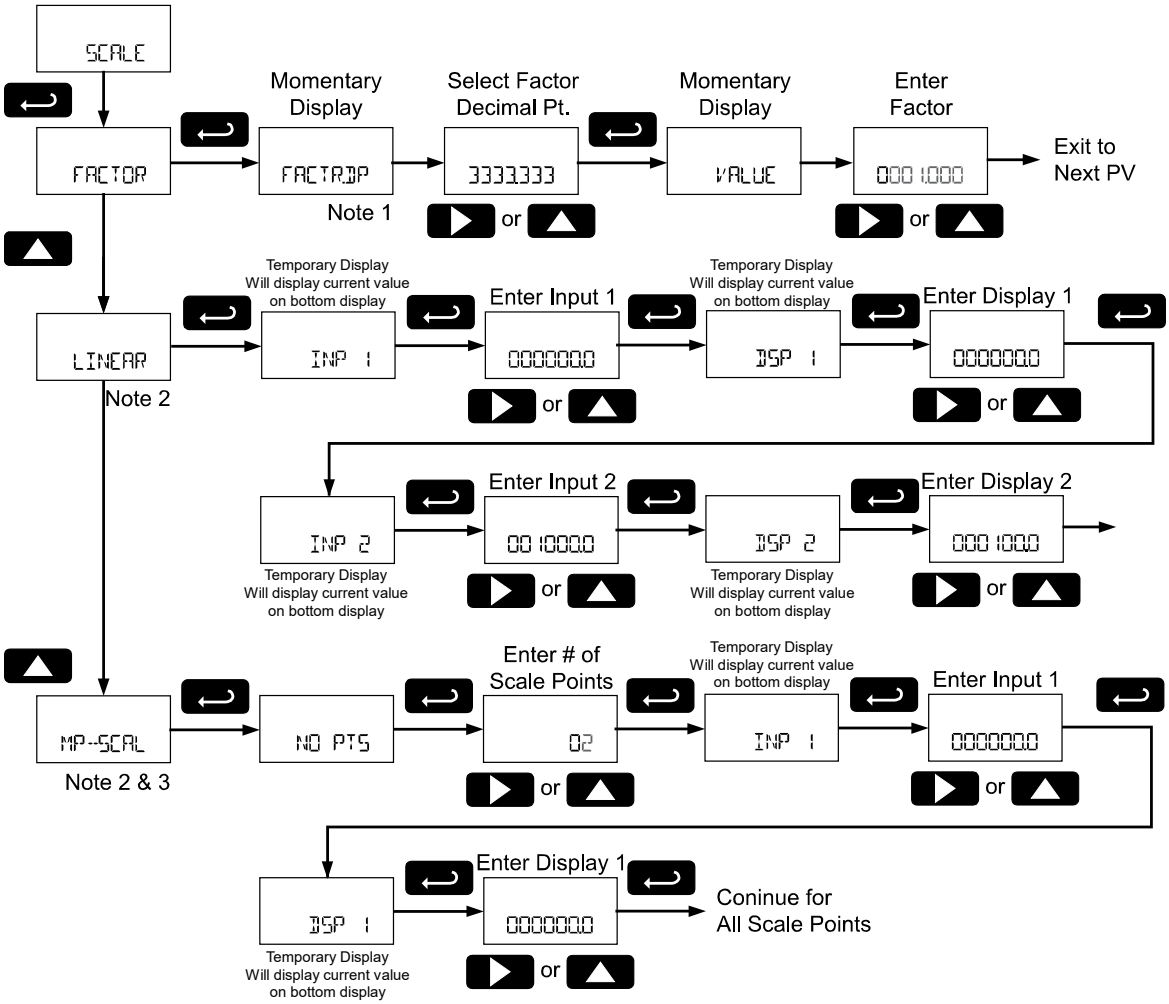

Note 1: The bottom display of the feet and inches display models does not show decimal points. While the decimal point may not appear, it is included on the factor programming steps.

For example: To enter a conversion factor of 2.54, select a factor decimal point with 2 decimal locations, and enter a factor value of 254.

Note 2: MP-SCAL is only available when scaling PV1.

Factor (FACTOR)

Factor scaling uses a conversion factor for scaling a number of PV register counts to a single display count. In other words, the factor acts as a multiplier to change Modbus PV register data units into display engineering units.

Factor Decimal Point (FACTRDP)

Enter the number of decimal point locations necessary to enter the conversion factor.

Conversion Factor Value (VALUE)

Enter the conversion factor; the multiplier value that is applied to the Modbus PV register data to convert it to the desired display engineering units.

For example: if the PV register data is a height in centimeters, but a height in inches is desired on the display, a factor of 0.393701 would be entered.

(Display Value) = (Modbus Register Value) * (Factor)

Example:
(386.08 cm) * (0.393701) = (152.00 in) = (12 ft 8 in)

Note: The bottom display of the feet and inches display models does not show decimal points. While the decimal point may not appear, it is included on the factor programming steps.

For example: if the PV register data is 0 to 100 in a flowmeter, but a flow rate desired on the display is 0 to 250 GPM, a factor of 2.5 would be entered. On feet and inches display models, there is no lower display decimal point. Therefore, a factor decimal point of 1 place is selected, and a conversion factor value of 25 is entered.

Linear (LINEAR)

Linear scaling is used to convert a linear scale of PV to display value.

Input Values 1 and 2 (INP)

Enter the Modbus PV register data for scaling points 1 and 2.

Display Values 1 and 2 (DSP)

Enter the corresponding display values for input points 1 and 2.

For example: If a PV register contains data in terms of tank height in feet for a 100 feet tank, the display value can be linearly scaled for an input of 0 feet (Input 1) displaying 0 percent (Display 1), and an input of 100 feet (Input 2) displaying as 100 percent (Display 2).

Not available on Modbus PVs assigned to the feet and inches display of feet and inches display models.

Multipoint Scaling (MP-SCAL)

This type of scaling is only available for PV1. Multipoint Scaling is used when multiple linear scaling points are required, such as round horizontal tanks or conical storage silos. Up to 32 linearization points may be entered, with linear scaling between each point.

Not available on Modbus PV1 if assigned to the feet and inches display of feet and inches display model.

Number of Points (NO PTS)

Enter number of linearization points. The default value is 2 points. For linear inputs requiring only 2 scale points, use *Linear* scaling.

Math Channel Display Setup (MATH)

The *Math Channel Display Setup* menu is used to configure the display options for each of the four math channels, CV1 to CV4. *The Menu will only display the math channels that have been enabled.* See *Math Channel (CV1 to CV4) Programming* (MATH) on page *41* for details on programming the math functions.

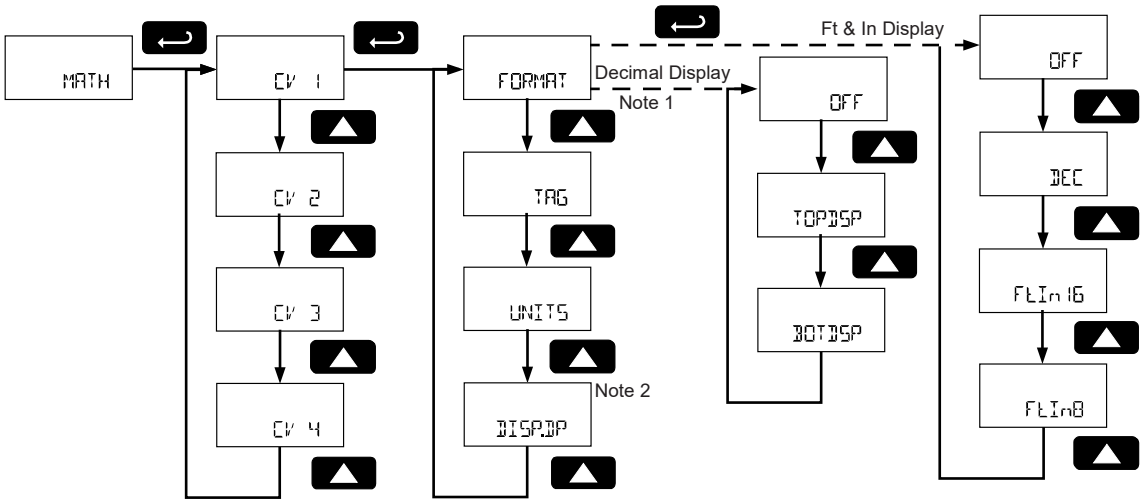

Note 1: FORMAT must be set to either TOPDSP or BOTDSP for the TAG, UNITS, and DISP.DP menus to be visible. If FORMAT is set to OFF, these menus are not visible.

Note 2: Display Decimal Point menu is not applicable to feet and inches display format.

Math Display Format (FORMAT)

The *Math Display Format* menu is used to configure the display format for each math channel. The Math Display Format must be set to display on either the top or bottom display for the TAG, UNITS and DISP.DP menus to appear.

Decimal Display Models

The math channel value may appear on the top display (TOPDSP) or bottom display (BOTDSP). The math channel value may also be turned off (OFF), and will not display, though it may be used in other math functions.

Feet and Inches Display Models

The math channel may appear on the top feet and inches display with 1/16 of an inch (FLIn16), 1/8 of an inch (FLIn8), or appear on the 7-digit bottom display (DEC) with no decimal points. The math channel may also be turned off (OFF), and will not display, though it may be used in other math functions.

Press **Enter** to access the *Format* menu and **Up** button to scroll through choices.

Press **Enter** to make a selection and proceed to the next menu.

Press the **Menu** button to back out of a menu or hold the **Menu** button to exit at any time.

Enter Math Channel Tag (TAG)

Each math channel may have a unique programmable tag to identify the math channel while the display is scanning. To program the tag, select the *Tag* menu and press **Enter**.

Program the custom tag as described in *Setting Alphanumeric Labels* (LAbEL) on page *18*. When the label has been programmed, press **Enter** to confirm the label and leave the *Tag* parameter. Press the **Menu** button to back out of a menu or hold the **Menu** button to exit at any time.

Enter Math Channel Units (UNITS)

Each math channel may have a unique engineering unit identifier to display while scanning. To program the units, select the *Units* menu and press **Enter**.

Program the custom unit as described in *Setting Alphanumeric Labels* (LAbEL) on page *18*. When the label has been programmed, press **Enter** to confirm the label and leave the *Units* parameter.

Press the **Menu** button to back out of a menu or hold the **Menu** button to exit at any time.

Set Display Decimal Point (DISP.DP)

Select the display decimal point location for the math channel value. To program the math channel display decimal point location, select the *Display Decimal Point menu* and press **Enter**.

Decimal Display Models

Set the display decimal point location for the math channel. Pressing the **Right** arrow moves the decimal point one place to the right (including no decimal point). Pressing the **Up** arrow moves the decimal point one place to the left. Press **Enter** to confirm the number of decimal points and continue programming.

Feet and Inches Display Models

Feet and inches display models do not have this menu. On feet and inches display models, this value is fixed, the top display PVs showing feet and inches and the bottom display PVs showing no decimal location.

Tank Size Indicator (TANKSZ)

The *Tank Size* menu defines the 100% full level for the 20-segment tank level indicator on feet and inches display models. This menu is not present in decimal display models. All PV values displayed on the top line feet and inches display will use this tank level indicator.

To set the maximum height of the tank level indicator, enter the level for thank to display as full. Enter the full value in feet.

See *Setting Numeric Values* on page *18* for more information on entering the tank full level in feet.

Press **Enter** to confirm and save the tank level indicator full value.

Tag Display Time (T-TAG)

If either display is set to toggle a custom tag as part of the *Top Display* or *Bottom Display* programming the scanner will prompt for a toggle time with this menu.

The custom tag for each variable will display before each variable for a number of seconds set by this parameter. The tag may be programmed to display for 1 to 49 seconds.

Press **Enter** to access the *Tag Display Time* menu. Use the **Up** and **Right** buttons to enter the tag display time. Press **Enter** to make a selection and proceed to the next menu. See *Setting Numeric Values* on page *18* for more information.

Press the **Menu** button to exit without saving changes.

Units Display Time (T-UNITS)

If either display is set to toggle units as part of the *Top Display* or *Bottom Display* programming the scanner will prompt for a toggle time with this menu.

The unit for each variable will display before each variable for a number of seconds set by this parameter. The unit may be programmed to display for 1 to 49 seconds.

Press **Enter** to access the *Units Display Time* menu. Use the **Up** and **Right** buttons to enter the units display time. Press **Enter** to make a selection and proceed to the next menu. See *Setting Numeric Values* on page *18* for more information.

Press the **Menu** button to exit without saving changes.

Scan Time (T-SCAN)

The scan time defines how long a variable will be shown on the display while automatically scanning. After the scan time has elapsed, the next tag, unit, and variable will be displayed.

The scan time may be programmed to cycle the display to the next variable every 2 to 99 seconds.

Press **Enter** to access the *Scan Time* menu. Use the **Up** and **Right** buttons to enter the scan time. Press **Enter** to make a selection and proceed to the next menu. See *Setting Numeric Values* on page *18* for more information.

Serial Communications Settings (COMM)

The *Serial Communications* menu is used to setup serial communications parameters necessary for communication via the RS-485 connection and Modbus.

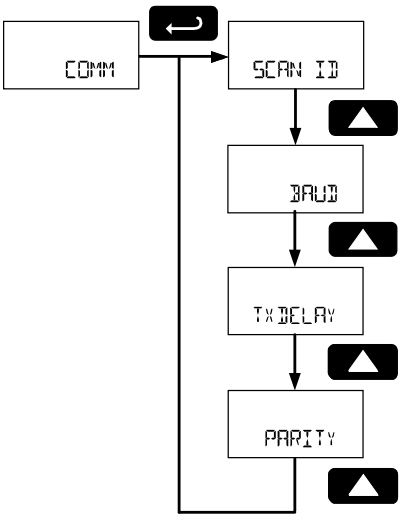

Press **Enter** to access the *Serial Communications Settings* menu then press the **Up** to scroll through the menu choices.

Press **Enter** to select a menu. Press **Menu** to back out of a menu or hold **Menu** to exit at any time.

Modbus communications is performed with the 3-wire (including Ground) RS-485 connector.

Refer to the PD6730X Scanner Modbus Register Tables located at www.predig.com for additional Modbus information.

Scanner Modbus ID (SCAN ID)

The *Scanner Modbus ID* menu sets the Modbus address (ID) of the scanner. The scanner Modbus ID may be programmed between 1 and 247. When using more than one device in a multi-drop mode, each device must be provided with its own unique address.

To program the Modbus ID, refer to *Setting Numeric Values* on page *18*.

Baud Rate (BAUD)

The baud rate may be set to 1,200; 2,400; 4,800; 9,600; 19,200; 38,400; 57,600; or 115,200 bps.

In the *Baud Rate* menu, use the **Up** button to scroll through the menu choices.

Press **Enter** to make a selection and proceed to the next menu.

Transmit Delay Time (TXDELAY)

The transmit delay may be set between 0 and 199 ms.

To program the transmit delay time, refer to *Setting Numeric Values* on page *18*.

Parity (PARITY)

The parity can be set to even (EVEN), odd (ODD), or none with 1 (NONE 1) or 2 (NONE2) stop bits.

In the *Baud Rate* menu, use the **Up** button to scroll through the menu choices.

Press **Enter** to make a selection and proceed to the next menu.

Advanced Menu

Display Functions & Messages

The scanner displays various functions and messages during setup of advanced features. The following table shows the *Advanced Features* menu functions and messages in the order they appear in the menu.

Display	Parameter	Action/Setting
ADVANCE	*Advanced*	Enter *Advanced* menu
OUTPUT	*Output*	Setup open collector outputs Out 1 and Out 2
OUT 1	*Output 1*	Assign function of open collector output 1
OFF	*Off*	Disable output
PULSE	*Pulse*	Set Out 1 or Out 2 for pulse output mode
RATE	*Rate*	Refer to pulse input manual for any reference to Rate, Total, or Grand Total.
TOTAL	*Total*	
Gr TOTAL	*Grand Total*	
RETRAN	*Retransmit*	
QUAD	*Quadrature*	Assign pulse output to quadrature
TEST	*Test*	Assign pulse output to test mode
PV	*Process Variable*	Assign pulse output to a PV or CV
SOURCE	*Source*	Set pulse output reference variable
ALARM	*Alarm*	Assign Out 1 or Out 2 for alarm output mode
PV NUM	*Process Variable Number*	Assign alarm output to a PV or CV
PV 1	*Process Variable 1*	Select Process Variable to assign alarm to (1-16)
SET	*Set Point*	Set alarm set point
RESET	*Reset Point*	Set alarm reset point
ON	*On*	Set output to on state
OFF	*Off*	Set output to off state
TIMER	*Timer*	Set Out 1 or Out 2 for timed pulse output mode
StArt	*Start*	Activate timed pulse output
PERIOD	*Delay*	Set the time of one period (seconds)
TIME	*On*	Set the active low pulse width time
OUT 2	*Output 2*	Assign function of open collector output 2
A OUT	*Analog Output*	Enter *Analog Output* menu

Display	Parameter	Action/Setting
SOURCE	*Source*	Set analog output reference variable
PV 1	*Process Variable 1*	Set PV as analog output source, can select any active PV (1-16)
DSPLY 1	*Display 1*	Output display 1 value
OUT 1	*Output 1*	Output 1 value
DSPLY 2	*Display 2*	Output display 2 value
OUT 2	*Output 2*	Output 2 value
SAVEP	*Save*	Save entered analog parameters
CV 1	*Math Channel 1*	Set CV as analog output source, can select any active CV (1-4)
DISABLE	*Disable*	Turn off the analog output
MATH	*Math*	Enter *Math* menu
CV 1	*Math Channel 1*	Program math channel (Channel 1-4)
MULTI	*Multiply*	Set math to multiply
PAR1	*Parameter 1*	Enter math function parameter 1
PAR2	*Parameter 2*	Enter math function parameter 2
PAR3	*Parameter 3*	Enter math function parameter 3
L2P1	*Level 2 Parameter 1*	Enter nested math function level 2 parameter 1
L2P2	*Level 2 Parameter 2*	Enter nested math function level 2 parameter 2
L2P3	*Level 2 Parameter 3*	Enter nested math function level 2 parameter 3
DIVIDE	*Divide*	Set math function to divide
DIFABS	*Absolute Difference*	Set math function to absolute difference
WAVG	*Weighted Average*	Set math function to weighted average
DRAW	*Draw*	Set math function to draw
RATIO	*Ratio*	Set math function to ratio
CONCEN	*Concentration*	Set math function to concentration
CONST	*Constant*	Set math function to a constant value
NONE	*None*	Set math function to none
ABS	*Absolute Value*	Set math function to absolute value
SQRT	*Square Root*	Set math function to square root
SUM	*Sum*	Set math function to sum
DIF	*Difference*	Set math function to difference

Display	Parameter	Action/Setting
GATE	*Gate*	Refer to pulse input manual
FILTER	*Filter*	
CUTOFF	*Low-Flow Cutoff*	
SCALCAL	*Scale & Calibrate*	
T RESET	*Total Reset*	
PASSWRD	*Password*	Enter the *Password* menu
UNLOCKD	*Unlocked*	Program password to lock scanner
LOCKED	*Locked*	Enter password to unlock scanner
PASS	*Password*	Program password to lock scanner parameters
UnLOC	*Unlock*	Password has been unlocked
LOCD	*Lock*	Password has been locked
PASS T	*Password Total*	Refer to pulse input manual
PASS GT	*Password Grand Total*	
CUSTOM	*Custom*	Enter *Custom* menu
POS 1	*Position 1*	Set menu position 1 (1-8)
SYSTEM	*System*	Enter *System* menu
SETTIME	*Set Time*	Set real-time clock date and time
YEAR	*Year*	Set the year
MONTH	*Month*	Set the month
01	*January*	Set month as January
02	*February*	Set month as February
03	*March*	Set month as March
04	*April*	Set month as April
05	*May*	Set month as May
06	*June*	Set month as June
07	*July*	Set month as July
08	*August*	Set month as August
09	*September*	Set month as September
10	*October*	Set month as October
11	*November*	Set month as November
12	*December*	Set month as December
DAY	*Day*	Set the day
TIME	*Time*	Set the hour and minute
DATALOG	*Data Log*	Enter *Data Log* menu
LOGTIME	*Log Time*	Set daily data log times
LOG 1	*Log 1*	Set first daily log time (1-4)

Display	Parameter	Action/Setting
DISABLE	*Disable*	Disable log number
ENABLE	*Enable*	Enable log number
INTERVL	*Interval*	Set interval log time
FULSTOP	*Stop When Full*	Data logging will stop when the log is full
CONT	*Continue*	Data logging will continue when the log is full, deleting old data
START	*Start*	Begin interval logging
LOGVIEW	*Log View*	View data log
LOGVIEW ALL	*All Log View*	View all data log points
ERASE	*All Erase*	Erase all logs
ERASE ALL?	*Erase?*	Confirm to erase all logs
BAKLITE	*Backlight*	Enable or disable backlight
ENABLE	*Disable*	*Disable* backlight
DISABLE	*Enable*	*Enable* backlight
AO CAL	*Analog Output Calibration*	Enter *Analog Output Calibration* menu
BACKUP	*Backup*	Enter *Backup* menu
SAVE?	*Save?*	Save current parameters to backup restore
LOAD?	*Load?*	Load parameters from backup restore
DEFAULT	*Default*	Restore factory default parameter settings
DFALTS?	*Reset Defaults*	Confirm factory reset
INFO	*Info*	Enter *Info* menu
SOFT	*Software*	Display software ID number
VER	*Version*	Display software version number
MODEL	*Model*	Display model number

Advanced Menu Programming (ADVANCE)

To simplify the setup process, functions not needed for most applications are located in the *Advanced* menu. Access the *Advanced* menu features by pressing **Enter** at the *Advance* menu in the Main Menu defined on page *19*.

Press the **Enter** button to access any menu or press the U**p** arrow button to scroll through choices.

Press the **Menu** button to back out of a menu or hold the **Menu** button to exit at any time.

The *Advanced* menu is used to select:

- Open Collector Output Configuration (OUTPUT)
- Analog Output Configuration (A OUT)
- Math channel functions (MATH)
- Set Passwords (PASSWRD)
- Reconfigure the *Main* Menu Structure (CUSTOM)
- Enter the *System* Menu for Scanner Operation and Data Logging (SYSTEM)

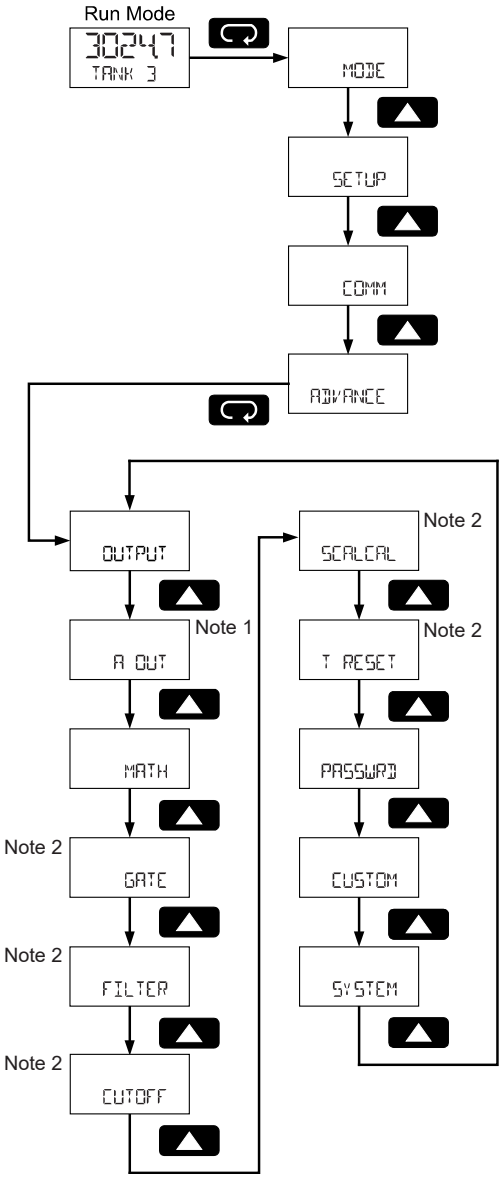

Note 1: Analog Output (A OUT) menu displayed only for scanners with the analog output option.

Note 2: Refer to pulse input manual

Open Collector Outputs (OUTPUT)

The scanner is equipped with two NPN open collector outputs that may be set up for pulse outputs, alarms, timed pulses, or turned off.

Pulse outputs can be based on a Modbus PV value, or math channel value. Both outputs may be used to generate a quadrature output based on any pulse menu output type. An output test mode is also selectable to generate pulses at a constant programmable frequency.

Alarms are available based on a Modbus PV or math channel. The alarm status will show on the display even if the output is not wired. The outputs may also be forced on or off.

A timed pulse output generates constant pulses at a specified frequency and on time.

The output may be disabled by selecting OFF.

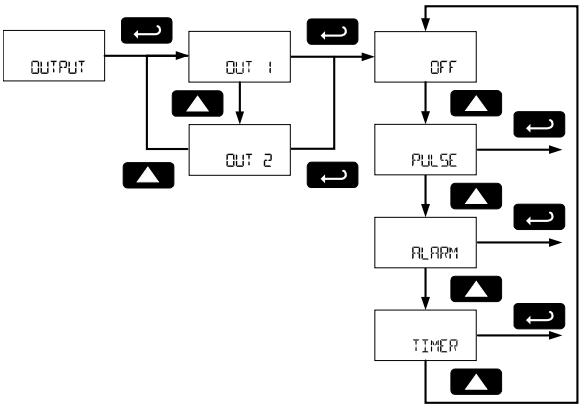

Output 1 and 2 Setup (OUT 1, OUT 2)

The function of open collector output 1 and 2 is configured using the *Off* (OFF), *Pulse* (PULSE), *Alarm* (ALARM), and *Timer* (TIMER) menus detailed below.

In the *Output 1 and 2* menus, use the **Up** button to scroll through the menu choices.

Press **Enter** to make a selection and proceed to the next menu.

See *Setting Numeric Values* on page *18* for more information on programming numeric count, set, and reset value.

Pulse Output (PULSE)

Pulse outputs may be assigned to Modbus PV (PV), math channel (CV), quadrature (QUAD), or test (TEST).

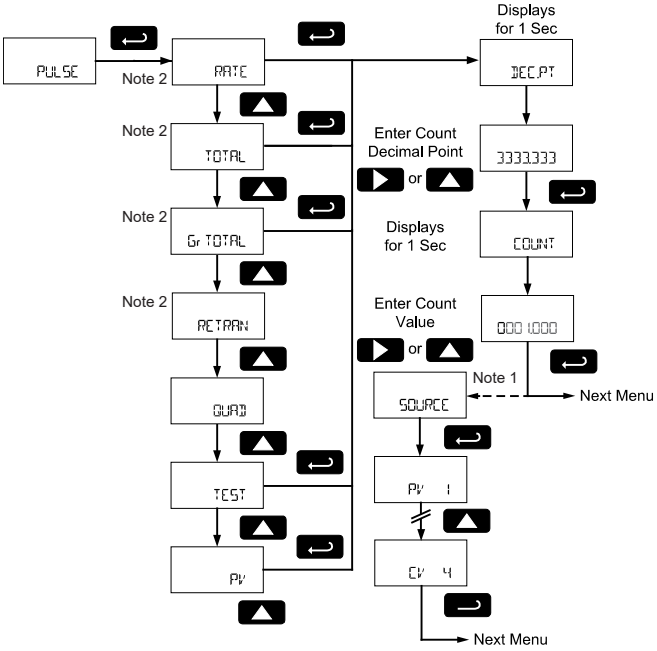

Note 1: SOURCE menu only applicable to PV option.

Note 2: Refer to pulse input manual

Quadrature Pulse Output (QUAD)

The pulse output set to quadrature will duplicate the other open collector output, but lag by ¼ duty cycle (90 degrees out of phase). For example, Out 1 will follow Out 2, if Out 1 is set to QUAD. Only one output should be set to QUAD. If both outputs are set to QUAD, both outputs will be disabled. The other output should be programmed as desired for the quadrature output function, and must be a pulse (PULSE) output selection.

Test Pulse Output (test)

The test output setting programs the output to generate pulses at a programmed constant frequency. Set the frequency decimal point location in the dECPt menu, and then enter the desired output frequency in Hz in the PULSE menu.

Modbus PV or Math Pulse Output (PV)

The pulse output may be based on an enabled Modbus PV or math channels CV1 to CV4. The pulse output frequency in hertz (Hz) is calculated as the value of the selected PV or CV divided by the programmable count (or divisor).

$$Output\ Frequency\ (Hz) = \frac{(PV\ or\ CV\ Value)}{Count}$$

The frequency of the pulse output will update as the PV or CV value is changed.
For example, if the output is set to reference PV 2, and PV 2 is reading 1540.5, with a count or 10, the pulse output frequency will be 154.05 Hz.

Alarm Output (ALARM)

Alarm outputs may be assigned to Modbus PV or math channel (PV NUM), always on (ON) or always off (OFF).

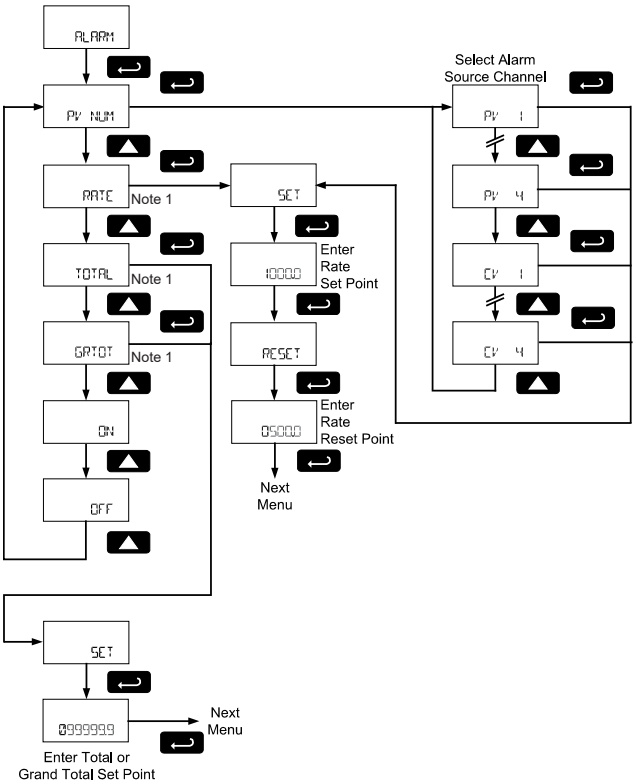

Note 1: Refer to pulse input manual

Modbus PV or Math Alarm (PV NUM)

Program a PV (PV1-16) or math channel (CV1-4) to trigger an alarm. Select the source PV or CV for the alarm and enter the display value set and reset points. The alarm deadband is determined by the difference between set and reset points. Minimum deadband is one display count. If set and reset points are programmed the same, output will reset one count below set point.

Force On State (ON)

This alarm mode forces the output to be active, or on. This mode is primarily used to test alarm systems.

Force Off State (OFF)

This alarm mode forces the output to be inactive, or off. This mode is primarily used to test alarm systems.

Timer Output (TIMER)

The timer output produces a constant pulse width at a constant frequency. Program the *Period* (PERIOD) from 0.1 to 999999.9 seconds (time from the start of one pulse to the start of the next pulse).

Program the *On Time* (TIME) for the active low pulse from .01 to 99999.99 seconds (pulse width). The *on* time must be less than the delay time (Period).

Select *Start* (START) to begin outputting the constant timed pulse.

Select *Stop* (STOP) to end outputting the constant timed pulse.

Scaling the 4-20 mA Analog Output (Aout)

The *Analog Output* menu is used to program the 4-20 mA output based on display values. This menu is not present on models without a 4-20 mA output option.

The 4-20 mA analog output (if equipped) can be scaled to provide a 4-20 mA signal for any display range selected for either Modbus PV 1 to 16 or math channel CV 1 to 4.The output may be disabled (DISABLE), and it will only output the minimum signal.

No equipment is needed to scale the analog output; simply program two display values and corresponding mA output signals.

Selecting the Analog Output Source

In the *Analog Output* (A OUT) menu, press the Enter button. In the *Source* (SOURCE) menu, press the **Up** button to scroll through the menu choices.

Press **Enter** to make a selection and proceed to the next menu.

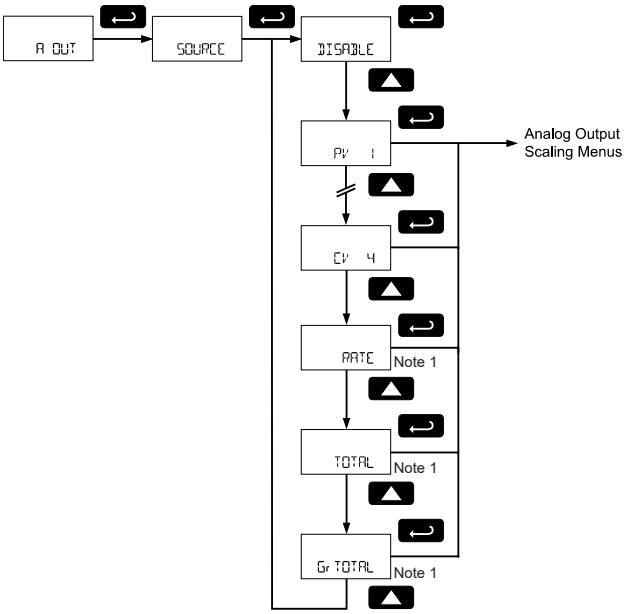

Note 1: Refer to pulse input manual

Enter Display and Output Values

To scale the analog output, enter display value 1 and a corresponding analog output value for this display, and enter display value 2 and a corresponding analog output value for this display value. This will provide a linearly scaled analog output.

On decimal display models, enter the output value in mA. On feet and inches display models, enter the output value in µA.

The following diagram details setting the analog output when the source is configured to display on the top display of a decimal display model.

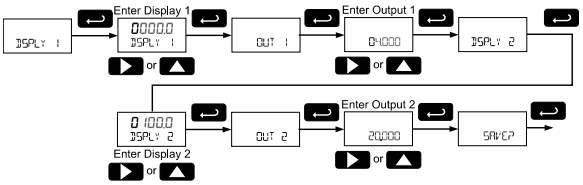

The following diagram details setting the analog output when the source is configured to display on the top display of a feet and inches display model.

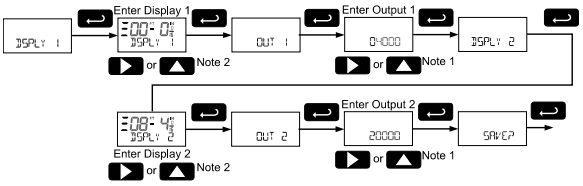

The following diagram details setting the analog output when the source is configured to display on the bottom display.

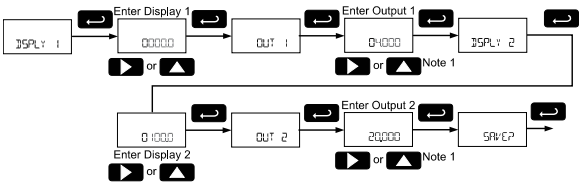

See *Setting Numeric Values* on page *18* for more information on programming the display and output values.

Note 1: On decimal display models, enter the output value in mA. On feet and inches display models, enter the output value in µA.

Note 2:The hundreds digit on the feet display does not display 0 as a seven-segment 0; instead 0 is represented with three horizontal bars as shown.

⚠ CAUTION

- Please note that when power is removed from the scanner, the analog output will drop below 1 mA.
- Consider this effect when designing any system using the 4-20 mA output.

Math Channel (CV1 to CV4) Programming (MATH)

The scanner includes four math channels, CV1 to CV4. Each math channel is constructed by selecting a math function and the desired parameters.

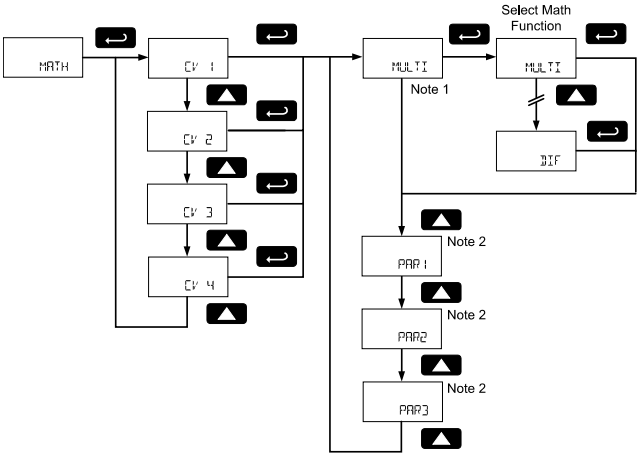

Note 1: The current math function selection will display as this menu item.

Note 2: Parameter 1, 2, and 3 will appear in the menu structure based on their use in the selected math function. See the table below for information on what parameters are necessary for each math function. If Constant is selected as the math function, the value will be immediately entered.

The available math functions are detailed below.

Math Selection	Function	Equation
SUM	Addition	PAR1 + PAR2
DIF	Difference	PAR1 - PAR2
MULTI	Multiplication	PAR1 * PAR2
DIVIDE	Division	PAR1 / PAR2
DIFABS	Absolute diff.	Abs(PAR1 - PAR2)
WAVG	Weighted avg.	((PAR1 – PAR2)*PAR3) +PAR2
DRAW	Draw	((PAR1 / PAR2) – 1) * PAR3
RATIO	Ratio	(PAR1 / PAR2) * PAR3
CONCEN	Concentration	PAR1 / (PAR1 + PAR2) * PAR3
CONST	Constant	Constant value of 0.0001 to 99999
NONE	None	Disable
ABS	Absolute Value	Abs(PAR1)
SQRT	Square Root	√(PAR1)

The available parameters for PAR1, PAR2, and PAR3 shown above are detailed below.

PAR Selection	Parameter	Description
PV 1	Modbus PV1	The scaled PV1 value; PV2 to PV16 also selectable
CV 1	Math Channel CV1	The math channel CV1 value; CV2 to CV4 also selectable
ABS	Nested Absolute Value*	Abs(L2 PAR1)
SQRT	Nested Square Root*	√(L2 PAR1)
SUM	Nested Addition*	L2P1 + L2P2
DIF	Nested Difference*	L2P1 - L2P2
MULTI	Nested Multiplication*	L2P1 * L2P2
DIVIDE	Nested Division*	L2P1 / L2P2
DIFABS	Nested Absolute diff.*	Abs(L2P1 - L2 PAR2)
WAVG	Nested Weighted avg.*	((L2P1 – L2P2)* L2P3) + L2P2
DRAW	Nested Draw*	((L2P1 / L2P2) – 1) * L2P3
RATIO	Nested Ratio*	(L2P1 / L2P2) * L2P3
CONCEN	Nested Concentration*	L2P1 / (L2P1 + L2P2) * L2P3
CONST	Constant	Constant value of 0.0001 to 99999
NONE	None	No parameter.

*Selecting this math function as a parameter will enter into the setup for a Nested Math Function. These parameters are not available for level 2 parameters used when setting up the nested math function.

Nested Math Functions

To create more complicated math functions, the first level parameters allow a math function to be selected as the parameter. In this case, a second level of parameters is selected for the nested math function. These level 2 parameters are level 2 parameter 1, *L2P1* (L2P 1), level 2 parameter 2, *L2P2* (L2P2), level 2 parameter 3, and *L2P3* (L2P3). Level 2 parameters are selected similarly to other math parameters; however additional nested math functions are unavailable for selection.

Entering a Constant Value

To enter a constant value, press **Enter** to select Constant (CONST). Value (VALUE) will display. Press **Enter** to confirm and enter a constant value. V.DP will display. Use the **Up** and **Right** arrows to select the number of decimal points used in the constant value. Press **Enter** to select the number of decimal points selected. Value will display. Set the constant value. See *Setting Numeric Values* on page *18* for more information.

No Parameter (NONE)

Selecting a parameter of None will disable the math function. Any math function with a parameter of None will display None (NONE) on the display as the value of the math function.

Setting Up Passwords (PASSWRD)

The *Password* menu is used to program a five-digit password to prevent unauthorized changes to the programmed parameter settings.

The lock symbol is displayed on decimal display models to indicate that settings are password protected.

Record all passwords for future reference. If appropriate, it may be recorded in the space provided.

For instructions programming numeric values see *Setting Numeric Values* on page *18* for more information.

Model	Password
Serial Number:	
Setting Lockout Password (PASS):	____ ____ ____ ____ ____

Locking Scanner Setup Parameters (PASS)

Enter the *Password* menu by pressing **Enter.** Select *Password* (PASS) by pressing **Enter**. Program a five-digit password. The scanner will return to *Run Mode* after locking any of the passwords.

Making Changes to a Password Protected Scanner

If the scanner is password protected, the scanner will display the message LOCKED when the **Menu** button is pressed. Press the **Enter** button while the message is being displayed and input the correct password followed by the **Enter** button to gain access to the menu. After exiting the programming mode, the scanner returns to its password protected condition.

Disabling Password Protection

To disable the password protection, access the *Password* menu, select the type of password to be disabled, and enter the programmed password. That password is now disabled until a new password is entered.

IMPORTANT

- **Did you forget the passwords?** The password may be disabled by entering a master password. If you are authorized to make changes, enter the master settings lockout (PASS) password 50865, to unlock the scanner.

Custom (CUSTOM)

The *Custom* menu is used to modify the initial programming menus that appear in the Main Menu when the **Menu** button is pressed in Run Mode.

⚠ CAUTION

- Changing the default menu setup with the *Custom* menu feature may change the setup and operation procedures described in this manual. Only operators familiar with the programming and operation of this unit should use this feature.

Eight menu positions are available. Menu positions 6 and 7 are factory programmed for *Setup* and *Advanced*.

After pressing **Enter** at the *Custom* menu, the display will flash *Position* (POS 1) and then display the parameter to appear in position 1 of the main menu.

To add a menu or parameter to the menu structure, or change the default menus, press **Enter** at the desired position (POS) to be edited, and use the **Up** or **Right** arrows to select the desired menu item for that position. Press **Enter** to save the setting. See the *Custom Menu Parameters* chart for a complete list of available menu selections for each position.

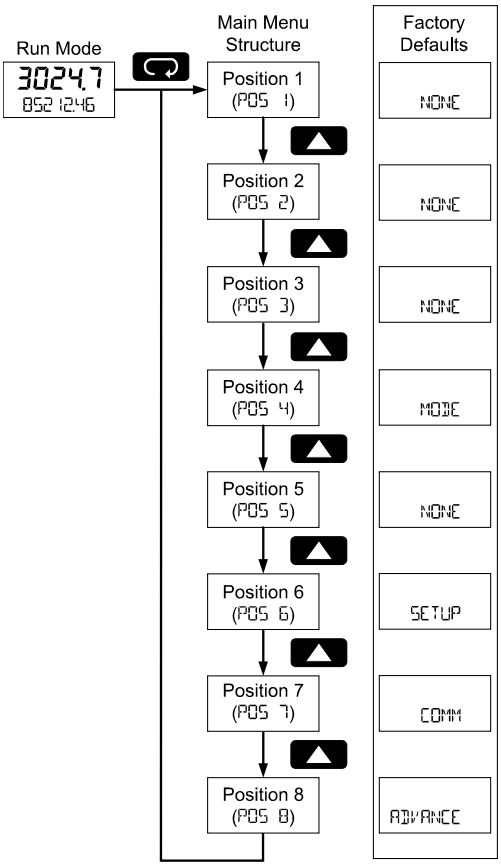

Custom Menu Parameters		
Display	**Parameter/Menu**	**Action**
NONE	*None*	Set no menu position display
UNITS	*Units*	Set to show *Units* menu
DECIMAL	*Decimal*	Set to show *Decimal* menu
DISPLAY	*Display*	Set to show *Display* menu
A OUT	*Analog out*	Set to show *Analog Output* menu
PASS	*Password*	Program password to lock scanner parameters
OUTPUT	*Output*	Set to show *Output* menu
OUT 1	*Out 1*	Assign function of pulse output 1
OUT 2	*Out 2*	Assign function of pulse output 2
DATALOG	*Data Log*	Enter *Data Log* menu
LOGTIME	*Log Time*	Set daily data log times
INTERVL	*Interval*	Set interval log times
LOGVIEW	*Log View*	Enter *Log View* menu
PASSWRD	*Password*	Set to show Password menu
SETUP	*Setup*	Set to show *Setup* menu
ADVANCE	*Advance*	Set to show *Advanced* menu
SYSTEM	*System*	Set to show *System* menu
MODE	*Mode*	Set to show *Mode* menu

System (SYSTEM)

The system function is used to set the real time clock, set daily data log times, enable/disable the backlight, access analog output controls used in troubleshooting, store, restore, and backup restore feature, enable/disable the battery power alert symbol on the display, and review basic system identification information.

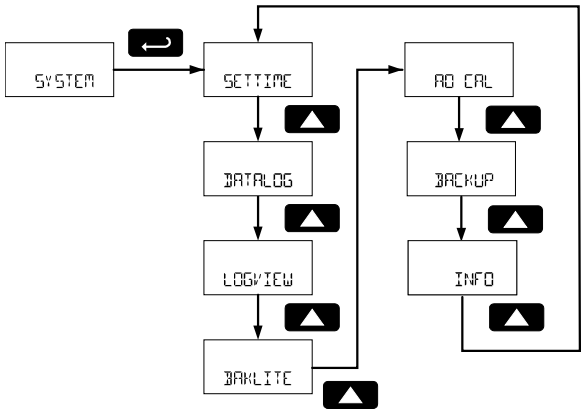

Set Real Time Clock (SETTIME)

The real time clock is used to trigger data log events, and is recorded at every logged data point. The *Set Time* menu displays the date and time.

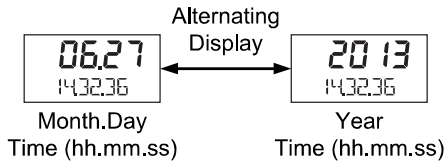

Figure 10. Real Time Clock Display Example – Decimal Model

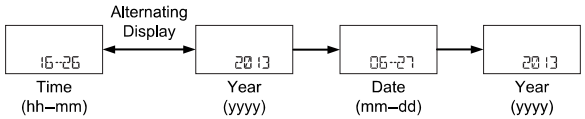

Figure 11. Real Time Clock Display Example – Feet & Inches Model

The above display examples show the date to be June 27, 2013; at 14 hours, 32 minutes, and 36 seconds.

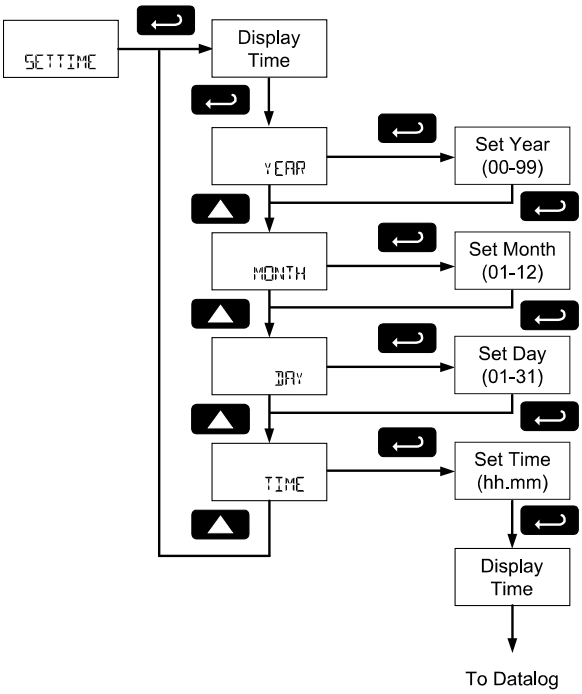

The year, month, day, hour, and minute may all be set by the user. The real time clock will need to be reset if external power and battery power are lost.

To program the time, select the time or date component to be programmed, and press **Enter**. To enter the time or date as a numeric value, see *Setting Numeric Values* on page *18* for more information.

Changing the time (hours and minutes) will reset the second clock to 0.

Data Log Setup (DATALOG)

The *Data Log* menu is used to setup and enable the data log functions. The scanner may contain up to 511 records, each containing the date, time, and log number. Each record may hold the first eight enabled Modbus PVs and all enabled math channel CVs.

The data log can hold 511 records of the first eight enabled Modbus PVs and math channel CVs.

The frequency of these records depends on the data log settings.

For example: If PV 1, 2, 3, and 4 are enabled, and CV 1 and 2 are enabled, the data log may record 511 logs containing PV 1, 2, 3, and 4, as well as CV 1 and CV 2. The data log will record these values even if CV2 is the only value set to display.

Log Time and Log Interval

There are two ways to configure the time when a data log record is recorded. The *Log Time* feature allows up to 4 data log events time to be entered for each day. The *Log Interval* feature allows a data log recording event at the selected time interval. At each data log event, all appropriate data records will be recorded.

Only the *Log Time* or *Log Interval* may be active at a time. While one type of data logging is enabled, the other menu is inaccessible.

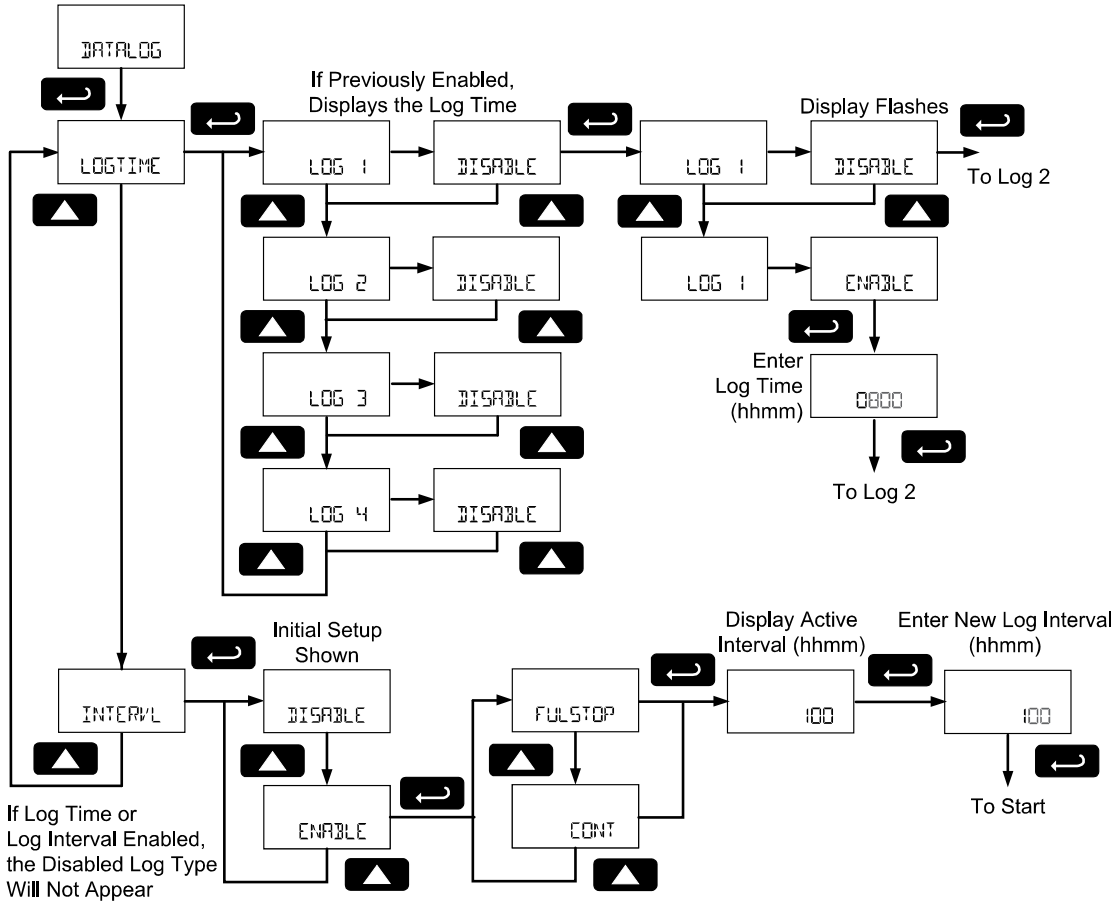

Log Time Setup (LOGTIME)

The *Log Time* menu contains four log events (LOG 1 to LOG 4). Each log time is configured independently. For each daily log time desired, enable a log, and set the log time for the hours and minutes the log is to be recorded. The time is set in real-time hours and minutes, based on the real time clock setup.

The *Log Time* feature will roll-over, deleting the oldest data logs (in blocks of 8) when the log is full and new logs must be recorded. This makes it the most useful for long-term data logging.

Interval Setup (INTERVL)

The *Interval* menu sets the time interval for data logging. Every time interval, one data log event will be recorded. To enable interval data logging, enable the feature, and set the interval time for the hours and minutes between each log.

If set to FULSTOP, the *Log Interval* feature will not delete old data, and data logging will stop when the log is full. This makes it the most useful for short periods and logging specific functions.

If set to CONT, the *Log Interval* feature will delete the old data when full and continue logging data. The *Log Interval* feature will roll-over, deleting the oldest data logs (in blocks of 8) when the log is full and new logs must be recorded. This makes it the most useful for long-term data logging.

View Data Log (LOGVIEW)

The Log View menu allows on-screen browsing of the data log event records stored in the scanner. Data points may be navigated by viewing the log number, date and time, first eight enabled PVs and four CVs. A known log may be jumped to immediately, avoiding a lengthy search for data. All logs may be deleted with the ERASE command, requiring confirmation.

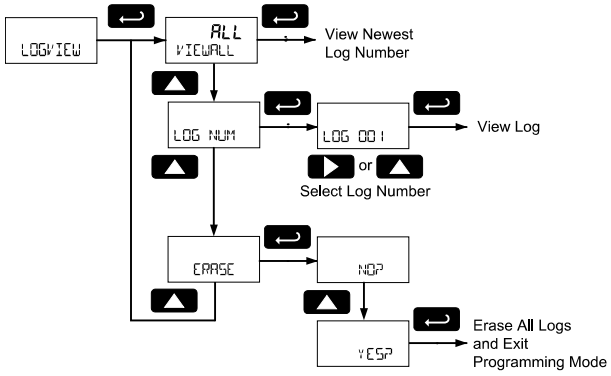

Once the log records are displayed, use the **Enter** key to display variable within the same log and move to the next log. Use the **Up** and **Right** arrows to move to the next or previous log number.

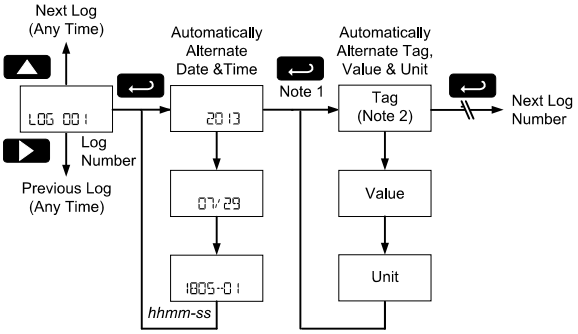

Note 1: All enabled PVs and CVs will display in order, the Tag for each PV and CV will flash before displaying the value.

Note 2: All tags, values, and units will appear on the lower display with exception of feet and inches formatted values on the feet and inches display models. These parameters will automatically alternate on the display.

Backlight (BAKLITE)

The *Backlight* menu is used to enable or disable the backlight. After pressing **Enter** to access the *Backlight* menu, press the **Up** arrow to *Enable* (ENABLE) or *Disable* (DISABLE) for the backlight.

Analog Output Calibration (AO CAL)

This feature is only used at the factory. It is not recommended to access this menu without instruction from technical support.

Backup & Restore (BACKUP)

The scanner saves all parameter settings, and no reprogramming is necessary when power is lost and restored to the scanner.

These features are used to save and restore programmed settings. Programming can be restored to a known saved good configuration, or to factory defaults. This is useful to restore scanners whose programming has been altered in unknown ways, or to quickly restore known good settings if mistakes are made during reprogramming.

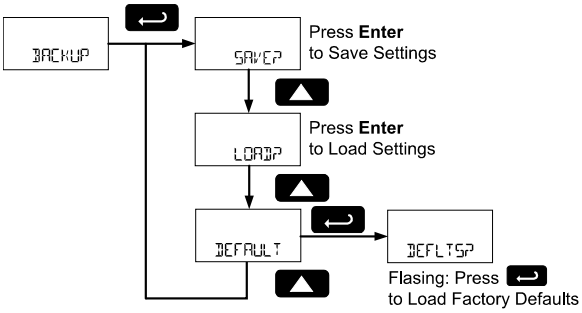

The *Save* feature (SAVEP) saves all current parameter settings into the memory of the backup restore. The backup restore feature is loaded with factory default settings until a new configuration is saved.

The *Load* feature (LOADP) restores all parameters to the programmed values stored in backup restore memory. The Load feature will not affect the current password settings.

⚠ CAUTION

- Once scanner parameters have been saved to memory by the backup restore feature there is no recovering the previously saved settings.
- Once parameters have been loaded into the scanner from the backup restore feature there is no recovering the previously programmed settings.

The *Default* feature (DEFAULT) restores all parameters to the factory default values. Factory default reset does not change the saved backup restore settings, or override passwords.

In the *Backup* menu, use the **Up** arrow key to select the desired menu. Press **Enter** to execute the save, load, or restore defaults command. To restore the scanner to factory defaults, press **Enter** again to confirm the request when *Defaults?* (DEFLTSP) *is blinking.*

Information (INFO)

The *Information* menu is part of the *System* features menu. It shows software identification number, version number, and extended model number. To view this information:

Go to the *Information* menu (INFO) and press **Enter** button.

Continue pressing **Enter** to scroll through the displays.

Following the information display, the scanner will exit the *Advanced* features menu and return to run mode.

Operation

Front Panel Buttons Operation

Symbol	Description
MENU	Hold the **Menu** SafeTouch button when in power save mode (display will show ⏻) to awaken SafeTouch buttons. Press the **Menu** button to enter Programming Mode. Press the **Menu** button during Programming Mode to return to the previous menu selections. Hold the **Menu** button for 1.5 seconds at any time to exit Programming Mode and return to Run mode. Press and **hold** the Menu button for 3 seconds to access the Advanced features menu.
PREV ▶	Press Previous **to** manually display the previous PV or input display. Press the Right arrow button in programming mode to move to the next digit or decimal position. Press **the** Right arrow button in programming mode to go backward through most selection menus.
NEXT ▲	Press Next **to** manually display the next PV or input display. Press the Up arrow button in programming mode to scroll forward through the menus, decimal point, or to increment the value of a digit
SCAN	Press Scan **to** pause automatic scanning. Press Scan to resume automatic scanning when paused. Press the **Enter** button in programming mode to access a menu or to accept a setting.

See SafeTouch Buttons *on page 15* for setup.

SafeTouch Button Operation

To actuate a button, press and remove one finger to the window directly over the marked button area. Remove finger to at least 4 inches away from the window in between button activations. SafeTouch and mechanical buttons may be held to cycle through menus or digits in place of repeatedly pushing a button.

⏻ SafeTouch Power Save Mode (Symbol shown on -2 decimal models only)

SafeTouch buttons enter a power saving mode after three minutes of inactivity. This mode is indicated by a power symbol (⏻) appearing in the lower right of the display. Only the **MENU** button is monitored in this mode. To activate the SafeTouch buttons, press and hold the menu button for up to five seconds. The display will read AWAKE, and the Safe Touch buttons will be fully enabled.

SafeTouch Disabled Mode

When the cover is removed, the four mechanical buttons located next to the sensors may be used. The sensors are disabled when a mechanical button is pressed and will automatically be re-enabled after 60 seconds of inactivity.

The SafeTouch power symbol (⏻) will blink in the lower right of the display if the buttons are disabled due to a mechanical pushbutton being pressed.

SafeTouch Button Equalize Delay

The SafeTouch buttons are designed to constantly recalibrate for ambient conditions. When the cover position is changed, the cover is removed, or an object is removed that was placed over the front window, it may take a moment for the SafeTouch buttons to recalibrate to the change in conditions.

Allow up to 2 minutes for the SafeTouch buttons to recalibrate to new conditions in these cases where the cover position was changed, or the front window is being unblocked.

⚠ IMPORTANT

- SafeTouch will not work if two or more buttons are detected as being pressed simultaneously. Be careful to avoid triggering multiple buttons or reaching across one button location to press another.

SafeTouch Button Tips and Troubleshooting

The SafeTouch Buttons are designed to filter normal levels of ambient interference and to protect against false triggering, however it is recommended that the Safe Touch Buttons be turned off (slide THRU-GLASS BUTTONS switch to OFF) if there is an infrared interference source in line-of-sight to the display or if the buttons are not needed.

SafeTouch Button Tips:

- To the extent possible, install the display facing away from sunlight, windows, reflective objects, and any sources of infrared interference.
- Keep the window clean.
- Tighten the cover securely.
- Use a password to prevent tampering.
- If the cover has not been installed and secured tightly, it may take a moment for the SafeTouch buttons to properly self-calibrate when the cover is tightened.
- After all connections have been completed and verified, connect the ribbon cable to the display module, fasten the display module to the base, install enclosure cover, and then apply power.

Pause/Start Automatic Scanning

Automatic scanning will cycle through the enabled Modbus PVs and math channel CVs. The time each variable will be displayed is programmed in the *Scan Time* (T-SCAN) menu on page *33*.

To pause scanning on the displayed variable, press the **Scan** button.

To start scanning again, press the **Scan** button.

Manual Scanning

The enabled Modbus PVs and math channel CVs can be manually cycled onto the display using the **Next** and **Previous** buttons.

The **Next** button will display the next enabled display variable, proceeding in the order of Modbus PVs and math channel CVs.

The **Previous** button will display the displayed variable shown prior to the one being displayed, cycling through display variable in the reverse order.

Reset Scanner to Factory Defaults

Reset to factory defaults will restore most scanner parameters to their factory default setting.

When the parameters have been changed in a way that is difficult to determine what's happening, it might be better to start the setup process from the factory defaults.

Factory default reset does not change the saved backup restore settings or override passwords.

Instructions to load factory defaults can be found in the *Backup & Restore* (BACKUP) menu on page *48*.

Factory Defaults & User Settings

The following table shows the factory setting for most of the programmable parameters on the scanner. Next to the factory setting, the user may record the new setting for the particular application.

Model: _____ S/N: _____ Date: _____

Parameter	Display[1]	Default Setting	User Setting & Notes
Mode	MODE	Master	
Modbus PV1	PV 1	Enable	
Slave ID	SLAVEID	1	
Function Code	FUNCODE	Function 03	
Register Number	REG NUM	40001	
Data Type	DATATYP	Float	
Byte	BYTE	1234	
Modbus PV2	PV 2	Enable	
Slave ID	SLAVEID	2	
Function Code	FUNCODE	Function 03	
Register Number	REG NUM	40001	
Data Type	DATATYP	Float	
Byte	BYTE	1234	
Modbus PV3	PV 3	Enable	
Slave ID	SLAVEID	3	
Function Code	FUNCODE	Function 03	
Register Number	REG NUM	40001	
Data Type	DATATYP	Float	
Byte	BYTE	1234	
Modbus PV4	PV 4	Enable	
Slave ID	SLAVEID	4	
Function Code	FUNCODE	Function 03	
Register Number	REG NUM	40001	
Data Type	DATATYP	Float	
Byte	BYTE	1234	
Modbus PV5-16	PV 5-16	Disable	
Poll Time	T POLL	2.0 seconds	
Modbus Timeout	TIMEOUT	0.2 seconds	
Retries to Error	RETRIES	3	
Setup	SETUP		
Display	DISPLAY		
Top Display (Decimal Display Models Only)	TOPDSP	PV	
Bottom Display	BOTDSP	Tag	

Parameter	Display[1]	Default Setting	User Setting & Notes
PV Setup	PVSETUP		
PV 1	PV 1		
Format (Decimal Display Models)	FORMAT	Top Display	
Format (Feet & Inches Display Models)	FORMAT	Ft-In-16	
Tag	TAG	PV 1	
Units	UNITS	FEET	
Display Decimal Point (Decimal Display Models Only)	DISP.DP	1	
Float Decimal Point (Decimal Display Models Only)	FLOAT.DP	1	
Scale	SCALE	Factor	
Factor Decimal Point	F.DP	3	
Factor Value	VALUE	1.000	
PV 2	PV 2		
Format (Decimal Display Models)	FORMAT	Top Display	
Format (Feet & Inches Display Models)	FORMAT	Ft-In-16	
Tag	TAG	PV 2	
Units	UNITS	FEET	
Float Decimal Point (Decimal Display Models Only)	FLOAT.DP	1	
Display Decimal Point (Decimal Display Models Only)	DISP.DP	1	
Scale	SCALE	Factor	
Factor Decimal Point	F.DP	3	
Factor Value	VALUE	1.000	
PV 3	PV 3		
Format (Decimal Display Models)	FORMAT	Top Display	
Format (Feet & Inches Display Models)	FORMAT	Ft-In-16	
Tag	TAG	PV 3	
Units	UNITS	FEET	
Float Decimal Point (Decimal Display Models Only)	FLOAT.DP	1	
Display Decimal Point (Decimal Display Models Only)	DISP.DP	1	
Scale	SCALE	Factor	
Factor Decimal Point	F.DP	3	

Parameter	Display[1]	Default Setting	User Setting & Notes
Factor Value	VALUE	1.000	
PV 4	PV 4		
Format (Decimal Display Models)	FORMAT	Top Display	
Format (Feet & Inches Display Models)	FORMAT	Ft-In-16	
Tag	TAG	PV 4	
Units	UNITS	FEET	
Float Decimal Point (Decimal Display Models Only)	FLOAT.DP	1	
Display Decimal Point (Decimal Display Models Only)	DISP.DP	1	
Scale	SCALE	Factor	
Factor Decimal Point	F.DP	3	
Factor Value	VALUE	1.000	
Math Channel Setup	MATH		
CV 1	CV 1		
Format	FORMAT	Off	
CV 2	CV 2		
Format	FORMAT	Off	
CV 3	CV 3		
Format	FORMAT	Off	
CV 4	CV 4		
Format	FORMAT	Off	
Tag Display Time	T-TAG	2 seconds	
Units Display Time	T-UNITS	2 seconds	
Scan Time	T-SCAN	2 seconds	
Pulse Input Setup	PULSE.IN	Disabled	
Communications	COMM		
Scanner Modbus ID	SCAN ID	240	
Baud Rate	BAUD	9600 bps	
Transmit Delay	TxDELAY	50 ms	
Parity	PARITY	Even	
Advanced Features	ADVANCE		
Open Collector Output	OUTPUT		
Output 1	OUT 1	Off	
Output 2	OUT 2	Off	
Analog Output	AOUT		
Source	SOURCE	Disable	
Math Functions	MATH		

Parameter	Display[1]	Default Setting	User Setting & Notes
Channel 1	CV 1	None	
Channel 2	CV 2	None	
Channel 3	CV 3	None	
Channel 4	CV 4	None	
Password	PASSWRD		
Parameter Lock Password	PASS	00000 (unlocked)	
Additional Parameters & Notes			

1. Feet and Inches display models do not include lower display decimal points.

Application Examples

The following applications show how the scanner can be configured for common applications.

Example 1: Master Polling Multivariable Level Transmitters

In this application we have a system consisting of four MTS LP-Series multivariable tank level gauges connected to a PD6730-AX0-I-2 displaying product level, interface level, and average temperature. The PD6730X is setup for Master mode, and it is polling the Modbus transmitters.

Note: As a tank level indicator displaying in units of feet, a PD6730-AX0-I-L could also be considered for this application. This would display feet and inches in the upper display and includes a tank level indicator.

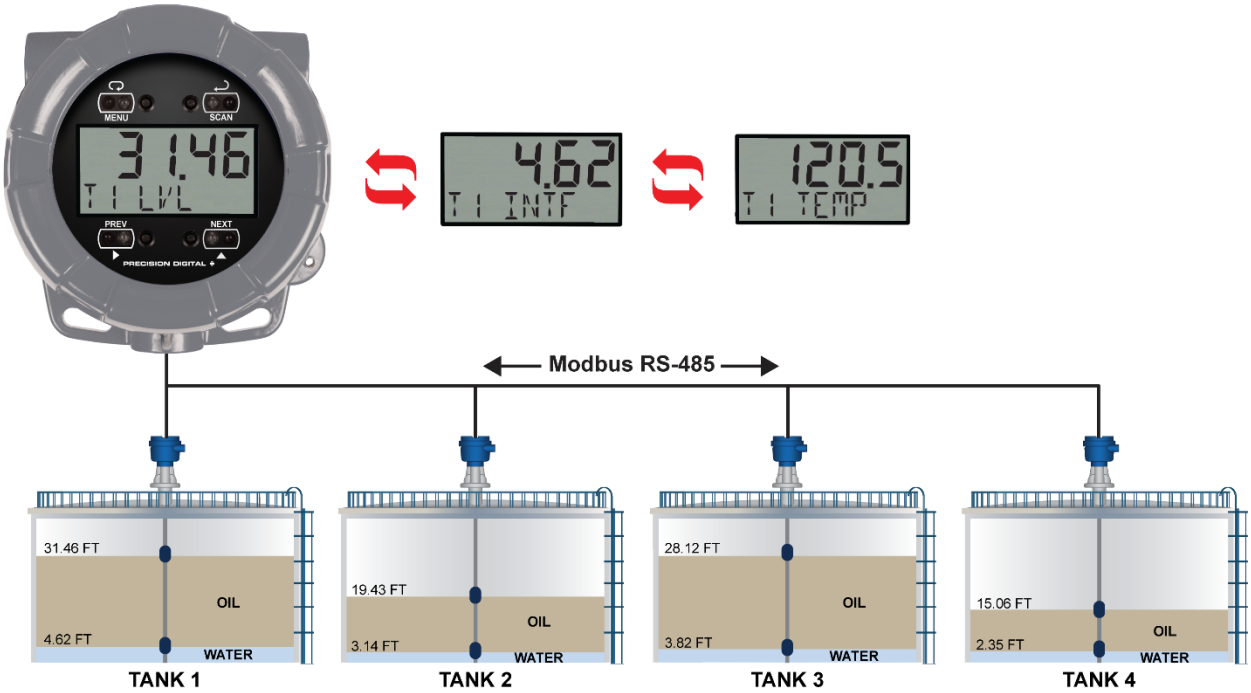

Example 1 Level Transmitter Setup, Register Numbers, & Process Variables

Serial Communications Parameters	Tank 1 Transmitter	Tank 2 Transmitter	Tank 3 Transmitter	Tank 4 Transmitter
Address (Slave ID)	001	002	003	004
Baud Rate	4800 bps	4800 bps	4800 bps	4800 bps
Transmit Delay	50 ms	50 ms	50 ms	50 ms
Parity	None 1	None 1	None 1	None 1

Fixed Serial Data Parameters	MTS LP-Series Transmitter Data
Level Register	30001, 30002
Interface Register	30003, 30004
Ave Temp Register	30017, 30018
Data Type	Long Integer (2 registers), Binary, Signed
Byte Order	1234 (big-endian: most significant digits register first)

The following table shows the PD6730X setup to work with the MTS LP-Series gauges.

Parameter	PD6730X	Description/Comment	Display
Mode	Master		
PV1	Enable		
PV1 Slave ID	1		
Function Code	04		
Register PV1	30001	Tank 1 Product Level	
Data Type	Long integer Binary, Signed		
Byte Order	1234		
PV2	Enable		
PV2 Slave ID	1		
Function Code	04		
Register PV2	30003	Tank 1 Interface	
Data Type	Long integer Binary, Signed		
Byte Order	1234		
PV3	Enable		
PV3 Slave ID	1		
Function Code	04		
Register PV3	30017	Tank 1 Average Temperature	
Data Type	Long integer Binary, Signed		
Byte Order	1234		
PV4	Enable		
PV4 Slave ID	2		
Function Code	04		
Register PV4	30001	Tank 2 Product Level	
Data Type	Long integer Binary, Signed		
Byte Order	1234		
PV5	Enable		
PV5 Slave ID	2		
Function Code	04		
Register PV5	30003	Tank 2 Interface	
Data Type	Long integer Binary, Signed		
Byte Order	1234		
PV6	Enable		
PV6 Slave ID	2		
Function Code	04		
Register PV6	30017	Tank 2 Average Temperature	
Data Type	Long integer Binary, Signed		
Byte Order	1234		

Parameter	PD6730X	Description/Comment	Display
PV7	Enable		
PV7 Slave ID	3		
Function Code	04		
Register PV7	30001	Tank 3 Product Level	
Data Type	Long integer Binary, Signed		
Byte Order	1234		
PV8	Enable		
PV8 Slave ID	3		
Function Code	04		
Register PV8	30003	Tank 3 Interface	
Data Type	Long integer Binary, Signed		
Byte Order	1234		
PV9	Enable		
PV9 Slave ID	3		
Function Code	04		
Register PV9	30017	Tank 3 Average Temperature	
Data Type	Long integer Binary, Signed		
Byte Order	1234		
PV10	Enable		
PV10 Slave ID	4		
Function Code	04		
Register PV10	30001	Tank 4 Product Level	
Data Type	Long integer Binary, Signed		
Byte Order	1234		
PV11	Enable		
PV11 Slave ID	4		
Function Code	04		
Register PV11	30003	Tank 4 Interface	
Data Type	Long integer Binary, Signed		
Byte Order	1234		
PV12	Enable		
PV12 Slave ID	4		
Function Code	04		
Register PV12	30017	Tank 4 Average Temperature	
Data Type	Long integer Binary, Signed		
Byte Order	1234		
Poll Time	5.0 seconds		
Timeout	0.3 seconds		
Retries	3	Default Value	

Parameter	PD6730X	Description/Comment
Serial Communications		
Scanner ID	246	Must be Unique on the Network
Baud	4800 bps	Must Match All Network Devices
Transmit Time Delay	50 ms	
Parity	None 1	Must Match All Network Devices
Setup		
Display		
Top Display	PV	Show Only PVs
Bottom Display	Tag & Units	Show Tag and Units for Each PV
PV Setup		
PV 1		Identical for PV1, 4, 7, and 10
Format	Top Display	
Tag	T1 LVL	Indicates Tank 1 Level
Units	FEET	
Display Decimal Point	2	
Scale		Scaling for Level
Input 1	00000	
Display 1	0.00	
Input 2	12000	x1000 inch
Display 2	10.00	Feet
PV 2		Identical for PV2, 5, 8, and 11
Format	Top Display	
Tag	T1 INT	Indicates Tank 1 Interface Registers
Units	FEET	
Display Decimal Point	2	
Scale		Scaling for Interface Registers
Input 1	00000	
Display 1	0.00	
Input 2	12000	x1000 inch
Display 2	10.00	Feet
PV 3		Identical for PV3, 6, 9, and 12
Format	Top Display	
Tag	T1TEMP	T1 Indicates Tank 1 Average Temperature
Units	°F	
Display Decimal Point	1	
Scale		Scaling for Temperature Registers
Input 1	00000	
Display 1	0.0	
Input 2	10000	x10,000 deg F
Display 2	10.0	Deg F

Example 2: Snooper Displaying Flow Rate from Modbus Flowmeters

In this application we have a system consisting of two Modbus enabled flowmeters connected to a SCADA system operated out of a control room. A Modbus PLC polls the data out of the flowmeters. A PD6730-AX0-I-2 has been added to the system as a Modbus Snooper, to provide the operators an easy to read field display near the flow lines.

The scanner displays one flow rate on the top display, and one on the bottom display. Each has an alternating tag and units for clear identification.

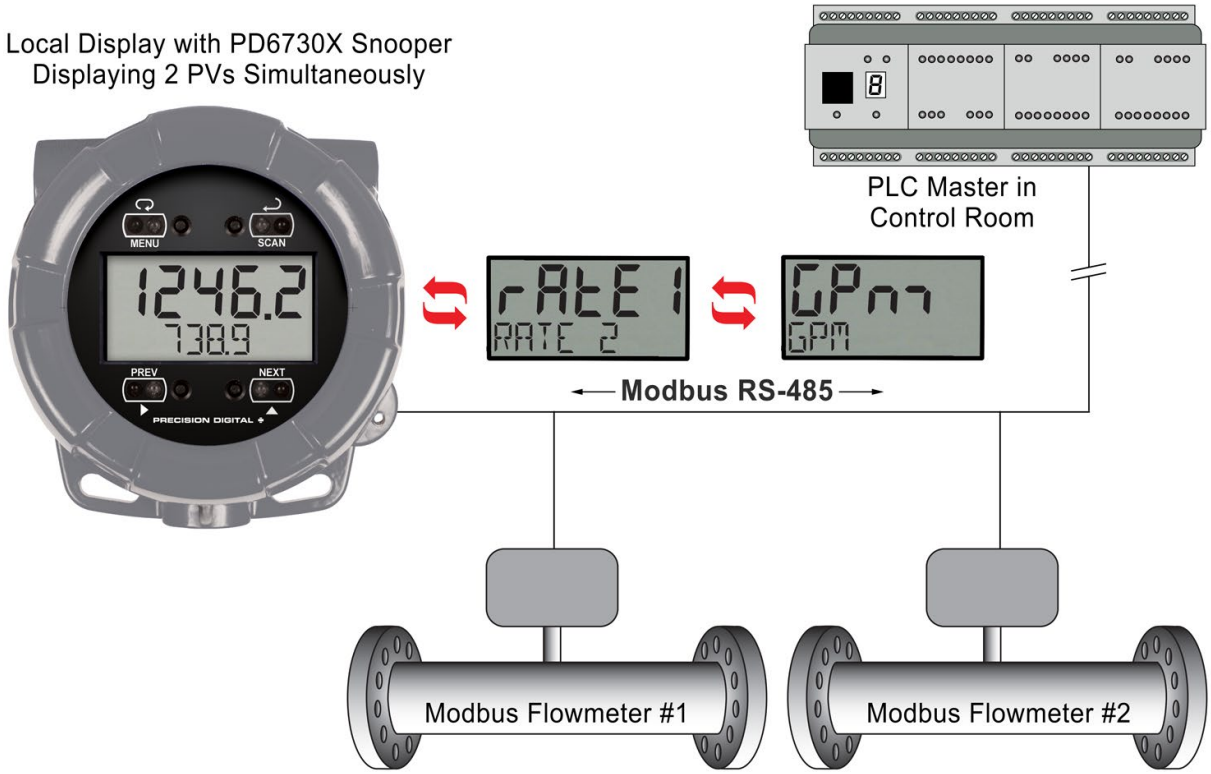

Example 2: Flow Meter & PLC Setup, Register Numbers, & Process Variables

Serial Communications Parameters	Flow Transmitter 1	Flow Transmitter 2	Control Room PLC
Address (Slave ID)	100	200	N/A
Baud Rate	4800 bps	4800 bps	4800 bps
Transmit Delay	50 ms	50 ms	50 ms
Parity	None, 1 Stop Bit	None, 1 Stop Bit	None, 1 Stop Bit

Fixed Serial Data Parameters	Modbus Flow Meter Data
Flow Data Register	40001, 40002
Data Type	Long Integer (2 registers), Binary, Signed
Byte Order	1234 (big-endian: most significant digits register first)

The following table shows the PD6730X setup to work with two Modbus flowmeters.

Parameter	PD6730X	Description/Comment
Mode	Snooper	
PV1	Enable	
PV1 Slave ID	100	Flow Meter 1 Address
Function Code	03	
Register PV1	40001	Flow Meter 1 Rate
Data Type	Long integer Binary,	
Byte Order	1234	
PV2	Enable	
PV2 Slave ID	200	Flow Mater 2 Address
Function Code	03	
Register PV2	40001	Flow Meter 2 Rate
Data Type	Long integer Binary,	
Byte Order	1234	
Snooper Mode Response Time	2.0 seconds	Default Value
Serial Communications		
Scanner ID	246	Must be Unique on the Network
Baud	4600 bps	Must Match All Network Devices
Transmit Time Delay	50 ms	
Parity	None, 1 Stop Bit	Must Match All Network Devices
Setup		
Display		
Top Display	PV, Tag, & Units	Show PV, Tag, and Units for Each Top PV
Bottom Display	PV, Tag, & Units	Show PV, Tag, and Units for Each Bottom PV
PV Setup		
PV 1		
Format	Top Display	Show PV 1 (Flow Meter 1 Rate) on Bottom Display
Tag	RATE 1	Indicates Flow Meter 1 Rate
Units	GPM	Indicates Gallons Per Minute
Display Decimal Point	1	
Scale		Scaling for Rate
Input 1	00000	
Display 1	0.0	
Input 2	50000	
Display 2	5000.0	
PV 2		
Format	Bottom Display	Show PV 2 (Flow Meter 2 Rate) on Bottom Display
Tag	RATE 2	Indicates Flow Meter 2 Rate
Units	GPM	Indicates Gallons Per Minute
Display Decimal Point	1	
Scale		Scaling for Rate
Input 1	00000	
Display 1	0.0	
Input 2	50000	
Display 2	5000.0	

Troubleshooting

Due to the many features and functions of the scanner, it's possible that the setup of the scanner does not agree with what an operator expects to see. If the scanner is not working as expected, refer to the *Diagnostics* menu and consult the recommendations described below.

Troubleshooting Tips

Symptom	Check/Action
No display or faint display	Check power connection. Press and hold **Menu** key for 5 seconds to check for Standby mode. If "WAKEUP" is displayed, press the **Enter** key to awaken the scanner from Standby mode.
SafeTouch Buttons do not respond	If ⏻ is displayed, hold **Menu** SafeTouch button to leave power save mode. If ⏻ is flashing, wait 60 seconds to leave mechanical pushbutton lockout mode. If the cover was recently tightly secured, you may need to wait up to 2 minutes for buttons to self-calibrate to the new cover position due to window reflection. Verify THRU-GLASS BUTTONS switch on display module is in ON position. Sunlight can interfere with the sensors. It is recommended to shield the window while operating the buttons by standing so as to block direct sunlight.
Scanner channel displays NONE	Verify that the polling parameters (slave address, register, etc) are correct. If the channel is a math channel CV, verify the chosen math function does not include any NONE selections or un-programmed Modbus PVs.
Long time between channel value updates	Verify all channels are communicating. Errors, combined with long timeouts and high allowable number of failures when polling Modbus devices, will combine to significantly delay the polling speed. Reduce the number of allowable timeout errors to check that communications are successful, and if there are errors, reduce the timeout if possible.
Scanner displays span error message during scaling	Verify minimum input span requirements
Scanner flashes maximum display	Check slave device registers are valid. Check math channels are not exceeding maximum possible display. Check input signal is within scaled range of 99999.
If the display locks up or the scanner does not respond	Perform hard reset by removing the display module or by removing DC power.
Backlight does not appear.	Backlight is intended for viewing assistance in dim lighting. It may not be noticeable under good lighting conditions.
Other symptoms	Call Technical Support for assistance.

Note: Certain sequences of events can cause unexpected results. To solve these issues, it is best to start fresh from factory defaults and map changes ahead of time, rather than at random.

Quick User Interface Reference

Pushbutton	Function
MENU	Go to Main menu. Back out one level of programming. Hold to enter Advanced menu.
PREV ▶	Return to previous display variable. Move to next digit or decimal point position. Return to previous same-level programming menu.
NEXT ▲	Display next display variable. Move to next selection or increment digit. Enter max/min display mode.
SCAN	Pause/start automatic display scanning. Accept selection/value and move to next selection. Acknowledge Alarm.

Contact Precision Digital

Technical Support

Call: (800) 610-5239 or (508) 655-7300

Fax: (508) 655-8990

Email: support@predig.com

Sales Support

Call: (800) 343-1001 or (508) 655-7300

Fax: (508) 655-8990

Email: sales@predig.com

Place Orders

Email: orders@predig.com

For the latest version of this manual please visit

www.predig.com

PRECISION DIGITAL CORPORATION
233 South Street • Hopkinton MA 01748 USA
Tel (800) 343-1001 • Fax (508) 655-8990
www.predig.com

LIM6730X_D
SFT092 & 93 Ver 1.200 & up
08/21